RICHIGER
EA 910 UNLOADER

Operator's Manual
Parts list

RICHIGER®

WE MEET YOUR PRODUCTION NEEDS

CDDF00051A

EA 910 UNLOADER

Operator's Manual

This manual

Richiger has endeavored to provide the most accurate and clear information on this equipment. Because of efforts to produce the best equipment possible, upgrades and improvements may precede this or subsequent manuals' updates. Therefore, contents of this manual are based on development in effect at the time of publication and are subject to change without notice.

Important
Before attempting machine operation, read this manual's instructions carefully.

This manual contains information and recommendations that may vary in accordance with user experience, climate, grain type, tractor weight and other variable conditions.

CDDF00051A

RICHIGER®

WE MEET YOUR PRODUCTION NEEDS

Warranty policy

Warranty terms

Unit: ***Hydraulic-Mechanical Grain Bag Unloader***

Model: ***EA-910***

RICHIGER MAQUINARIAS S.A, located in Avellaneda 661, Sunchales, Santa Fe province, Argentina, warrants its product EA-910 mechanical grain unloader from defects in materials and workmanship under normal operating conditions and proper application, in accordance with the specifications for operation as described by the manufacturer, for the period of 365 days from date of delivery to buyer.

Limitations on Warranty

This warranty is expressly in lieu of any other warranties, express or implied, including any warranty of merchantability or fitness for a particular purpose.

Buyer's sole and exclusive remedy under this warranty shall be limited to the repair, replacement or exchange of warranted parts at our option, F.O.B. our factory, or designated service center, agent or representative. If the agent or representative grants any warranty greater in scope or time period or labor allowance than that detailed herein, RICHIGER MAQUINARIAS S.A shall not be liable beyond the herein stated limitations.

Equipment and accessories not of our manufacture are not covered by this warranty. Any claim with regards to defective aforementioned equipment and accessories shall be submitted by RICHIGER MAQUINARIAS S.A to the original manufacturers for analysis and subsequent non-approval or approval of repair, replacement or exchange, at their option.

No special, incidental, consequential or other damages or contingent liabilities including, but not limited to, loss of life, personal injury, loss of crops, loss due to fire or water damage, loss of business or business income, down time costs and trade or other commercial loss arising out of the failure of product. The term product and products as used in this warranty designates the whole finished unit in its entirety, i.e. the complete assembled machine, and/or all and every individual component, part, equipment and accessory that forms said complete assembled machine.

Normal wear and tear associated with use is expressly excluded from this warranty.

No products shall be returned without prior authorization from RICHIGER MAQUINARIAS S.A.

Buyers and their agents shall prepay all transportation charges for the return of such products to RICHIGER MAQUINARIAS S.A. or designated service center. There will be no acceptance of any charges for labor and/or parts incidental to the removal and remounting of product repaired or replaced under this warranty.

This warranty does not cover conditions over which RICHIGER MAQUINARIAS S.A. has no control including, without limitation, contamination, pressures in excess of the recommended maximum, products damaged or subject to accident, abuse or misuse after shipment from factory, products altered and repaired by anyone other than RICHIGER MAQUINARIAS S.A. factory personnel or representative or source approved by RICHIGER MAQUINARIAS S.A in writing prior to commencement of said work.

The first buyer is responsible for proof of delivery date of product for the purpose of establishing warranty time of validity. Warranty can continue for new user should the product be resold by the first buyer during valid period of warranty, only if this situation is reported in writing, with enclosed documentation as proof of purchase. Warranty will not be applicable if series number or other identification markers are erased, obliterated or otherwise altered.

Limitations on Warranty

The first buyer is responsible for proof of delivery date of product for the purpose of establishing warranty time of validity. Warranty can continue for new user should the product be resold by the first buyer during valid period of warranty, only if this situation is reported in writing, with enclosed documentation as proof of purchase. Warranty will not be applicable if series number or other identification markers are erased, obliterated or otherwise altered.
The following are types of failures which are not attributable to defects in materials and/or workmanship and which are not considered by RICHIGER MAQUINARIAS S.A. as part of the warranty extended hereunder. This listing is by way of example and is not intended to be exhaustive:

1) Product suffered damages attributable to accident, abuse, neglect or ignorance.
2) Product was not used in accordance with manufacturer's recommendations.
3) Product did not receive required maintenance.
4) Failure ensued after replacement of original parts without express consent of RICHIGER MAQUINARIAS S.A. , or modifications that in RICHIGER MAQUINARIAS S.A.'s judgment may have affected performance, safety and/or dependability parameters.
5) Product was used in a manner or for a purpose for which it was not designed or intended to be used.
6) Incorrect mounting of external gears, pulleys.
7) Stripped splines or keyways on drive shafts.
8) Damage due to deterioration during periods of storage by the purchaser prior to operation.
9) Damage of any kind from erosive or corrosive action of any gases or liquids handled by the machinery.
10) Lack of or incorrect type of hydraulic fluid, lubricant, oil and/or grease.
11) Contamination of hydraulic fluid.
12) Operating beyond recommended maximum speeds, pressures and temperatures.
13) Repairs or disassembly by unauthorized personnel.
14) Misalignment of drive shafts, gears, sprockets and power driven elements.
15) Damage due to voltage spikes, static discharge, electrical storms, physical abuse, externally controlled device failure and improper fusing.

Buyer inspection and acceptance

Within 15 days after delivery to or receipt by the buyer of the product, the buyer shall inform the seller in writing if product is found defective or short in any respect. Failure to so inform the seller or any use by buyer of product shall constitute conclusive evidence that the seller satisfactorily performed and the buyer waives any right to reject the product thereafter

Cut-Out Warranty Registration Card

This form must be filled out and signed by the customer at the time of delivery, and sent to factory within 30 days of delivery.

Machine Description:			
Model #:			
Unit #:			
Date of Purchase:		Date of Delivery:	
Customer Name:			
Address:			
City:		State:	
Dealer Name:			
Address:			
City:		State:	

The machine detailed above and the Operator's Manual have been received and I understand and have been thoroughly instructed by my dealer about how to operate the machine, Operator's Manual content, equipment care, safe operation & warranty terms, and have personally reviewed the Warranty Policy Terms.

	Buyer's signature:

RICHIGER®

WE MEET YOUR PRODUCTION NEEDS

Richiger Maquinarias SA
Avellaneda 661,
S2322BCM Sunchales,
Province of Santa Fe,
Argentina

Cut-Out Warranty Registration Card

This form must be filled out and signed by the customer at the time of delivery, and sent to factory within 30 days of delivery.

01. Technical specifications page 02
02. Dimensions page 03
03. Safety precautions page 04
04. A word about the hydraulic controls. page 05
05. Switching from transport to work page 06
06. Attaching the bag page 09
07. Grain extraction procedure page 13
08. Ending grain extraction page 16
09. Emptying the last section of bag page 16
10. Detaching bag from roller page 19
11. Back to transport position page 20
12. Maintenance page 21
13. Gear oil filling procedure page 22
14. Lubrication chart page 23
15. Lubrication schedule page 25
16. The grain flow concept page 26
17. General indications for efficient operation page 27
18. General indications and safety tips page 31
19. Hand signals page 32
20. Parts list page 35

Materials to be extracted	All kinds of dry grains (wheat, sorghum, maize, sunflower, soybeans, rice, etc.) and pelletized materials	
Capacity	Up to 300 tons/tour (*)	
Tractor	Minimum power:	60 CV
	PTO revolutions:	540 rpm
Extraction system		Automatic bag pickup system
		Working height hydraulically controlled
		Bag slasher blade
		Works mechanically and hydraulically
		Adjustable working width
Extraction		High clearance discharge auger, mechanical drive
PowerTransmission		Drive shaft w / shear bolt protection
		Mechanical central discharge auger & cross augers
Tires		11 L15 – 10 ply
	Tire pressure:	30 lbs./sq. in.
Total weight		2000 kg. (4400 lbs.)

(*) Work capacity can vary according to grain type, moisture content and other factors

Manufacturer reserves right to change specifications at any given time without previous notification

Transport position

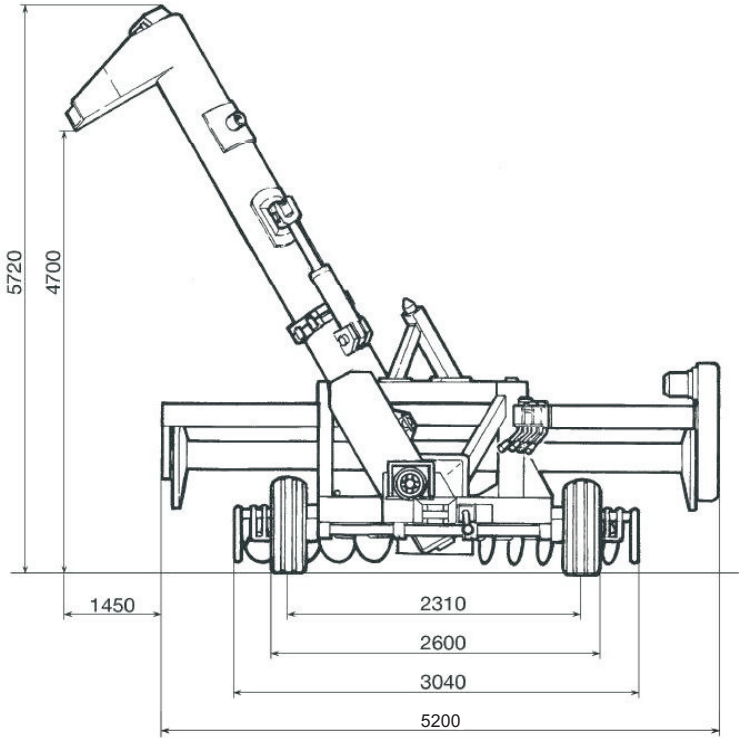

Work position

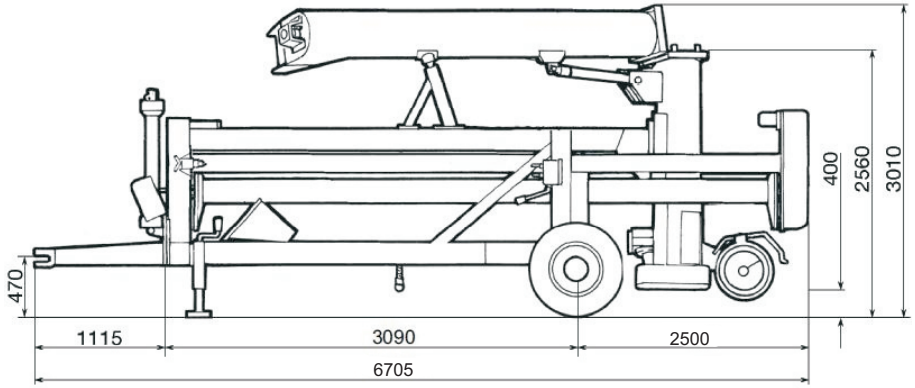

- Most accidents are caused by human error. Follow all safety procedures.
- Make sure all people are safely positioned before starting tractor's engine and engaging the PTO.
- Keep unloader clean and sheltered when not in use. This diminishes risk of deterioration and eventual failure.
- Keep a fire extinguisher handy.
- Decals with safety indications and warnings should be strictly heeded, kept in good condition and replaced if necessary.
- When towing the machine, drive with the utmost caution on public roads.
- Keep hands, feet and clothing well away from moving parts.
- Stop the tractor's engine before attempting a hands-on task on the unloader.

For the operator

In order to obtain maximum performance from your grain bag unloader, we recommend you keep the owner's manual in a handy place for quick consultation. Read the manual carefully before attempting to unload grain from bags and pay special attention to operating and maintenance instructions.

Before transporting the grain unloader, verify that:

a)	The tow bar pin is properly secured
b)	Check tire pressure
c)	Check that wheel bolts are properly tightened
d)	Attach safety chains between machine's tow bar and tractor drawbar for added security on the road

IMPORTANT

The operator should become familiarized with machine controls before attempting actual operation. Keep unit in good working condition. Any modification could cause malfunctioning, potentially dangerous situations, or reduced machine durability.

As will be seen in this manual, there are frequent references to the first lever, the second lever, and the third lever of the valve that regulates hydraulic flow rates, and thus operating speeds. In the diagram below can be seen the first and second levers (which open and close the hydraulic cylinders) mounted on valve sections to the left of the control knob, and the third lever (which drives the roller) mounted on a valve section to the right of the control knob.
The diagram shows the speed effect that turning the knob clockwise or anticlockwise, in combination with each specific lever, will have on the different hydraulic circuits.
For example, setting roller speed on initiating extraction is simpler if starting from low revs and then increasing them as necessary. In this case the knob can initially be turned completely clockwise, in which position the roller will not move at all, and then progressively be turned counterclockwise until the desired rpm are attained. In another example, if one of the cylinders does not move when the corresponding lever is operated, it would indicate that the knob is turned completely anticlockwise and no oil is flowing through that circuit. It will be therefore necessary to turn it clockwise.

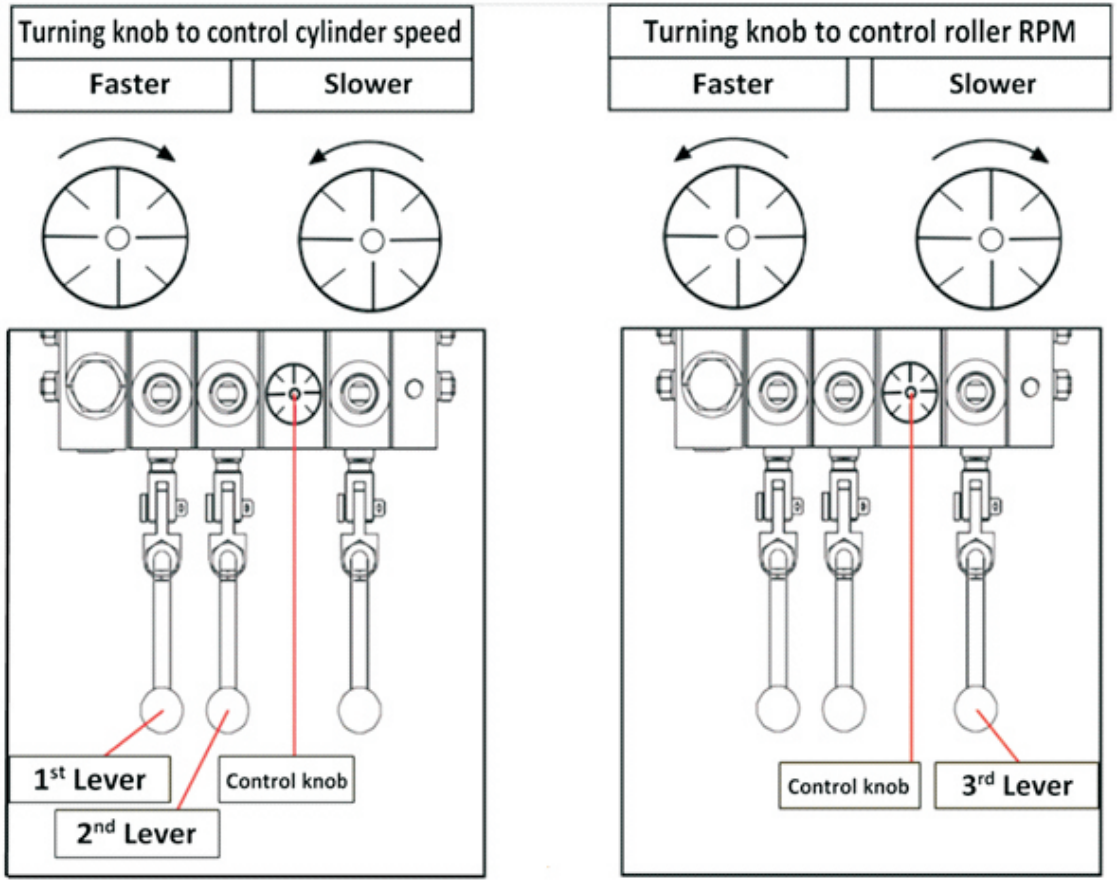

WARNING:

At no time during the unloading operation should anyone, except the operator standing at the hydraulic controls, approach unloader or bag, and that includes both tractor and truck drivers. Onlookers should keep a safe distance. And never allow anyone to lean against the bag: augers are turning inside.

1) Hitch tractor to unloader, connect hoses to the tractor's hydraulic circuit and connect drive shaft to the tractor's power take-off.

2) To the side of the machine, on the roller cross beam, an array of three levers, a turn knob and a pressure limiting valve control the unloader's hydraulics. A decal attached next to them (Fig. 1) shows each control's function.

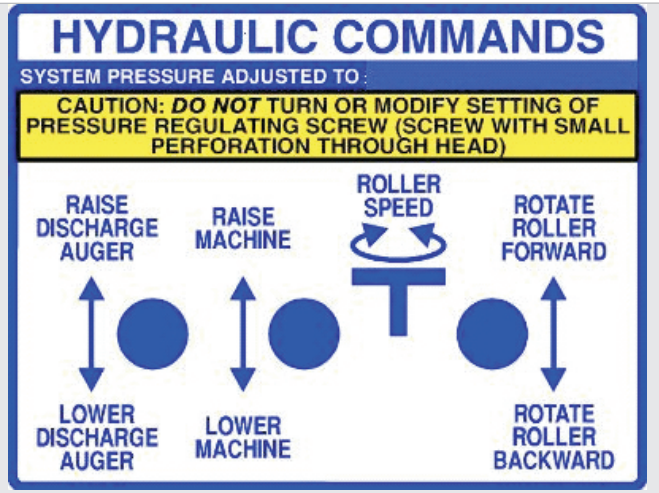

Fig.1

First step in preparing for work is raising the discharge auger. With the tractor's hydraulics turned on, move first lever “A” its upward position (Fig. 2). This will raise the auger tube.

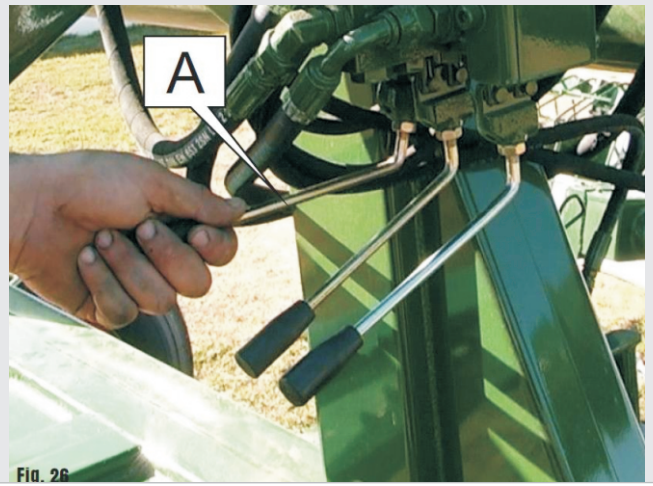

Fig.2

As soon as auger is fully extended, move back the lever to its mid (neutral) position. Once the unloader has finished working and is to be towed away, the sequence is reversed and the tube is lowered by moving down the lever.

The sequence ends once the upper half is resting firmly upon its transport prop and the control lever is returned to neutral position.

NOTE:

A pressure limiting valve set to 850 PSI is provided as a safeguard against excessive pressure in the hydraulic circuit. If this value is exceeded, oil will bypass the hydraulic motor and momentarily bring operation to a standstill.

3) Next, the second lever is used to regulate working height (i.e., clearance of the sweep augers to the ground) by means of a hydraulic cylinder. First, this center lever should be moved to top position in order to raise the unloader. To adjust for desired clearance, and the object here is to set the sweep augers as close to the ground as possible without scraping against it and compromising bag integrity (see “General indications for efficient operation” on page 26), a set of three clamp-on stops of different size is provided.

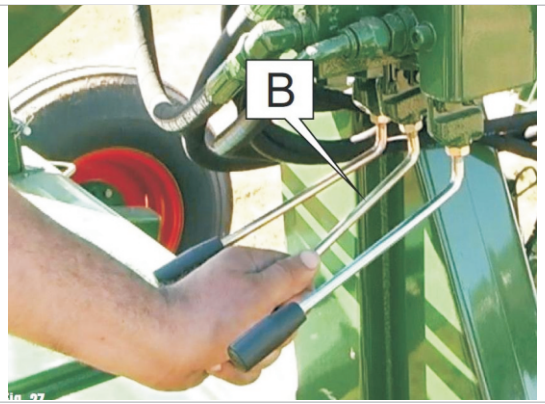

Fig.3

Fig.4

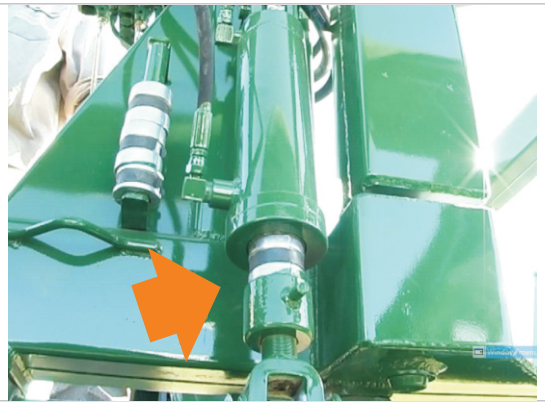

Once a combination of stops or a single stop have been selected and placed around the cylinder rod, second lever “B” is pulled down (Fig. 3) so that the weight of the unloader comes to rest upon the stops (Fig. 4). At this point the lever is returned to its neutral position. The height of the machine can be modified at any point, even when the sweep augers are inside the bag.

IMPORTANT:

The unloader should not be raised or lowered with the hydraulic cylinder if the augers are deep within the grain mass, as this could place undue strain on some components. The correct procedure is to release a few feet of plastic from the roller by counter rotating it hydraulically, advance forward with tractor to extricate the sweep augers from the grain, modify machine clearance with the hydraulic cylinder removing or adding stops as necessary, back the machine once again into the bag to position the augers next to the grain, and reinitiate PTO and roller to continue unloading.

4) The third lever, used to control roller rotation,is not used at this stage.

5) Remove the pin at the base of the support stand, swing the stand upward and attach temporarily to main beam with same pin (Fig. 5).

Fig.5

6) Pull back the spring-loaded pin that holds the roller assembly in place during transport and swivel it 90º to work position (Figs. 6 & 7).

Fig.6

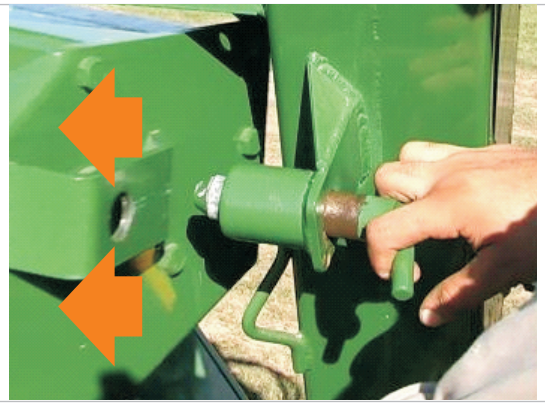
Fig.7

7) Lower the support stand and reinsert pin at the base (Fig. 8).

Fig.8

8) Remove the sweeper screw extensions from their transport location and insert them in the main auger shafts, not mixing left and right hand screws. Also remove protection grids and install (Figs. 9 & 10).

9) The sequence is reversed when changing back to transport mode.

Fig.9

Fig.10

Attaching the bag

06

1) Open the end of the bag and along the top section make a lengthwise cut approximately 2 meters (7 ft.) long.

Spread open the resultant flaps to the side
(Figs. 11 & 12).

Fig.11

Fig.12

CAUTION:

Do not prolong the cut to the point where grain is filling the bag and exerting pressure. This could cause a rip that spreads along the full length of the bag.

2) Turn the cutter blade around so that its cutting edge faces outward. The blade will cut open the bag as the roller pulls it in.
(Fig. 13).

Fig.13

3) Drive the tractor/unloader pair in reverse and align with the bag opening as straight and dead center as possible.
Back up the unloader into the bag until the sweep augers come lightly in contact with the grain, but do not shove or attempt to wedge the sweep augers forcefully into the mass of grain.
Be careful that the wheels are not treading on any part of the bag (Fig. 14).

Fig.14

4) Pull the third lever “C” up to rotate bag pick-up roller forward until the sharpened studs that hold the bag reach topmost position (Figs. 15 & 16). If roller does not turn initially, hold lever up for a few more seconds until clutch engages automatically. Then move lever back to neutral.

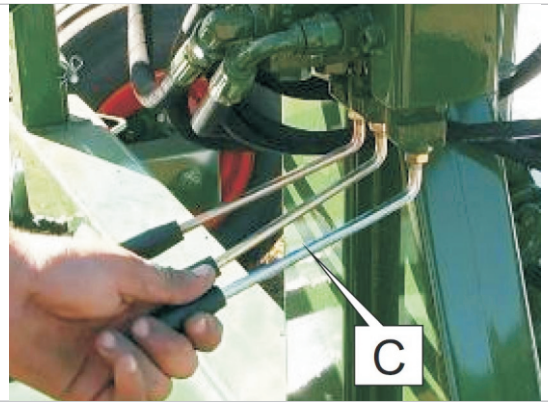

Fig.15

Fig.16

5) Lift the bottom half of the bag bringing it up to the roller. Notice that the bottom half is one continuous section of plastic that runs the entire length of the roller and that it is the black inner layer of plastic that is visible.

Punch the plastic sheet through each holding stud (Fig. 17) leaving a remainder of 10 or 20 inches to the edge.

Fig.17

Do not worry if the plastic is not perfectly distributed along the length of the roller or if folds and creases remain after attachment (Fig. 18).

Fig.18

6) Once the bottom half of the bag has been secured in this manner, place the upper half over the bottom half already fitted; punch the plastic sheet through each stud (Fig. 19), starting from the studs at the end of the roller and progressing toward the center. Notice that it is the white outer layer that is now visible and that there are two sections of plastic: the initial cut has divided the top part of the bag in two parts. The left segment must be passed to the left of the discharge auger and fastened to the studs on that side of the roller, while the right segment must be passed to the right of the auger tube and fastened to the studs on that side (Fig. 20). Once unloading operation is underway, the initial cut will be continued by the cutter blade.

Once unloading operation is underway, the initial cut will be continued by the cutter blade.

Fig.19

Fig.20

IMPORTANT:

There is no need to be overly precise when fastening the bag to the roller. Even though at this stage the plastic may look crumpled and in disarray, it will stretch and straighten after a few turns of the roller. The basic consideration here is having the bottom part of the bag (the part hooked to the roller first) hold some slack relative to the upper part attached last (one or two feet is enough). The latter should be attached shorter so that the roller tugs at it first. The small margin of slack in the bottom section plus the plastic sheet's elasticity helps form a rounded shape that contains the grain as the bag is rolled in. The round shape also helps keep adequate clearance between bag and sweep augers (see “General indications for efficient operation”, page 27).

1) Make absolutely sure that the tractor's gear case is disengaged and brakes are off. Failure to comply with this can result in a torn bag or mechanical malfunction. The machine is now ready to begin unloading grain. First, pull up third lever “C” (Fig. 23) to turn roller forward about half a turn or more so that it gatherssome plastic sheet (Fig. 21) and then move lever back to neutral. Check that the bag passes through the cutter blade located on the auger tube (Fig. 22) in preparation for beginning work.

Fig.21

Fig.22

2) Engage the tractor PTO with engine idling, throttle so PTO reaches 500/540 rpm's and once the augers are turning move the roller control lever to its upper position. Normally it is left in that position until the unloading operation is finished (Fig. 23). Turn to the variable flow valve. This valve handles roller rotation speed through a turning knob located at the top of the hydraulic valve array (Fig. 24). Turning the knob anti-clockwise *increases* rotational speed; turning it clockwise *decreases* it. The higher the speed, the more grain is brought in. At any point during operation roller can be brought to a complete halt by closing the valve knob. Open the valve if it was previously closed and augment speed so that grain begins to be delivered through the discharge auger and to accumulate at the front end of the bag.

Fig.23

Fig.24

3) To determine proper speed, wait until grain reaches a level that is approximately 10 centimeters (4 inches) below the roller's level and keep it there by adjusting the knob in either direction. (See “General indications for efficient operation” on page 22 for further information on regulating grain height within bag).

This can be verified visually by observing the mass of grain through the cutter blade opening at the top of the bag. If the gap between grain level and pick-up roller grows too close, *and* grain is being pulled up into the roller with the bag folds, then too much material is accumulating inside the bag faster than it can be discharged.

Operating speed must be lowered by turning knob *clockwise*. If the gap between roller and grain increases, more grain must be supplied by turning the knob *anti-clockwise* and speeding up the roller. The knob is turned very gradually, avoiding any abrupt changes of grain flow.

The unloader should now be delivering a steady stream of grain to the receiving truck or trailer (Fig. 25). The truck will have to move every so often to stay alongside the retreating bag.

Fig.25

CAUTION:

It is critical that grain not be allowed to collect higher up in the bag than level recommended (see “General indications for efficient operation”, page 27) because it can be drawn up with the bag, rolled in with the plastic sheet and form large masses of bulging grain that continue to get bigger. If that happens, operation is stopped, roller is disengaged (see “Detaching bag from roller, page 20), tractor is made to advance a few meters so that enough plastic is unrolled to be cut off with a knife, all the used plastic is discarded from the roller and operation is recommenced. Although it is ideal that no grain be picked up by the roller, small bulges here and there can be put up with as long as roller speed is decreased and grain ceases to be pulled in.

4) It is advisable to check direction once in a while and if necessary correct the steering wheel so that the tractor continues to be pulled back in a straight line. It is very important to prevent the sweep auger extremities from touching the bag sidewalls as this could tear the plastic.

That is the reason tractor and machine should be positioned in a straight line and aligned with the bag when initiating labor. If noticed that the unloader is not working aligned with the bag and that the auger protection grids have either come into contact with the plastic or are about to make contact, it may be too late to correct the situation by steering alone.

When bags are filled on uneven terrain or the tractor pulling the bagger swerves or the bagger's brakes are adjusted while working, the bag can curve, and the curvature can be quite sudden and pronounced. The operator should watch for this while unloading and try to follow curvature with the tractor's steering wheel as far as possible to avoid contact of the augers with the bag's walls.

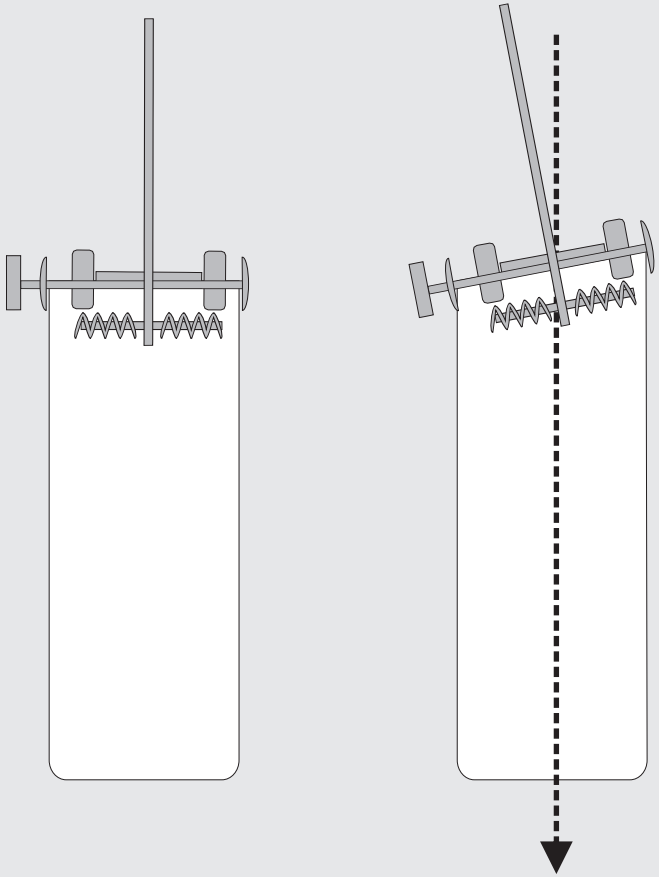

CAUTION:

When not possible to correct misalignment by steering action only - in situations as described above - operation should be halted and the unloader realigned before it ruptures the bag and grain is lost. It should be done as follows: PTO is turned off and the roller is counter-rotated hydraulically to slacken off as much plastic sheet as may be necessary to provide scope for maneuvers (there is no need to detach bag from roller for this specific correction). Tractor and unloader are first driven forward to extract the sweep augers from the grain and then maneuvered to line up straight with the bag, sweep augers placed next to the grain (not wedged forcefully into the grain) ready to initiate work again once PTO and roller are reengaged.

Ending grain extraction

08

When the bag is to be closed because work has been completed and the unloader is being taken away, sufficient plastic is unrolled, either hydraulically or by mechanically disengaging the roller, for the bag to be sealed with plastic strips or 2” x 4” boards nailed together.

IMPORTANT:

Whenever grain extraction is ended, either if the unloader will remain with bag attached to continue work later or if it will be towed away, the correct termination sequence is as follows:

a) The roller is brought to a complete standstill by setting valve lever in neutral position or closing flow control knob, in order to stop the input of grain.

b) PTO is left engaged and working for a few minutes so that all loose grain is unloaded, ensuring there is no buildup inside the discharge auger tube that could be cause of transmission overload and breakdown.

Emptying the last section of bag

09

1) When the unloader reaches a point where it can advance no further because the bag is almost finished and the augers are not picking up any more grain (Fig. 27), it is time to cut short the main operation. After stopping hydraulics and stopping the PTO for reason of safety, the operator should use a knife to rip open the upper part of the bag, remove stops and lower the machine so that the augers may pick up additional grain (Fig. 28) while the roller remains stationary. The tractor can engage in some gentle forward and reverse action to boost grain collection. Repeating this sweeping action, the volume to be loaded by hand can be considerably reduced.

WARNING:

At this stage no one should approach the bag to hasten discharge by heaping grain onto the augers, or attempt any other action in proximity of the augers since these are turning and could cause serious injury or worse. *Stay away!*

Fig.26

Fig.27

Once all grain possible has been picked up in this way the tractor engine is stopped. For reason of operator safety, it is now necessary to disconnect the sweep augers from the main transmission while still allowing the discharge auger to turn and unload grain. Remove the lock pin from the sweep auger gear case and pull out the coupling gears' handle (Fig. 28), which will disconnect the auger drive. With sweep augers disconnected, the auxiliary hopper is attached to the slot located at the base of the discharge auger.

Fig.28

At this stage the sliding panel or divider that separates the sweep augers from the discharge auger is introduced in corresponding space between auger flightings (Fig. 29). Then provided crescent shaped covers are attached to the ends of the divider, thus effectively covering and sealing both openings of the cylinder shaped grain reception chamber (Fig. 30). In this way the totality of grain introduced in the auxiliary hopper will be captured by the discharge auger, valuable loading time gained as no grain is tossed out of the chamber by the whipping and churning action of the auger.

Fig.29

The tractor engine is turned on, its PTO is engaged and the last grain remaining in the bag is shoveled into the auxiliary auger by hand (Fig. 31). Once unloading is concluded and engine turned off, the sweep auger coupling gears' handle should be pushed in and the lock pin reinserted. The coupling gears are connected to the drive shaft by means of a flange fitted with shear bolts. Should these bolts be cut, unscrew gear case cover and replace with low carbon steel SAE 1010 or C10 bolts of same diameter as the original.

Fig.30

Fig.31

CAUTION:

Always disable the sweep augers when grain is being introduced manually in the hopper in the final stages of work.

Detaching bag from roller

10

To detach the bag, the roller must turn freely. The EA-910 model uses an automatic clutch to connect and disconnect the roller drive, so there is no need at any time to open the transmission's cover to perform this operation. The photo that depicts the operating mechanism is only for information purposes. Never operate the machine with protection cover open.

DANGER:

Roller drive protection cover must remain in place at all times during operation. Removal can mean death or serious injury to operator or bystanders.

a) Pull the third hydraulic lever “C” to low position (Fig. 32) to rotate the bag pick-up roller backward. This action releases tension as the plastic begins to unroll. At this point, the arm cam “D”(Fig. 33) will fall back and disengage the roller drive.

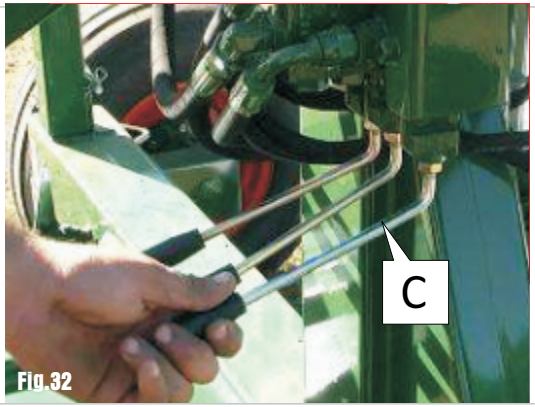

Fig.32

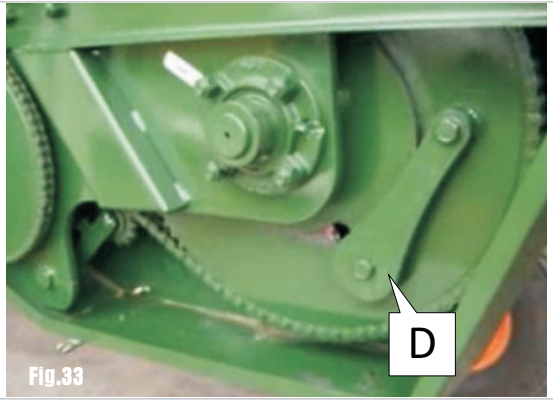

Fig.33

b) Once the arm cam has disengaged, usually with an audible clunk, continue turning roller until marker “E” appears in viewing window “F”. This positively indicates that the roller now rotates freely (Figs. 34 & 35). Move lever back to its middle, neutral position, and do not move again till operation is finished.

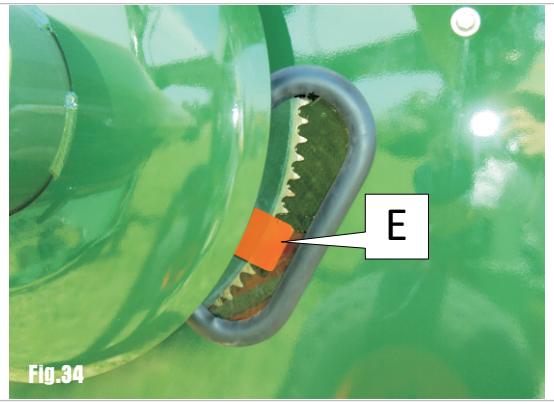

Fig.34

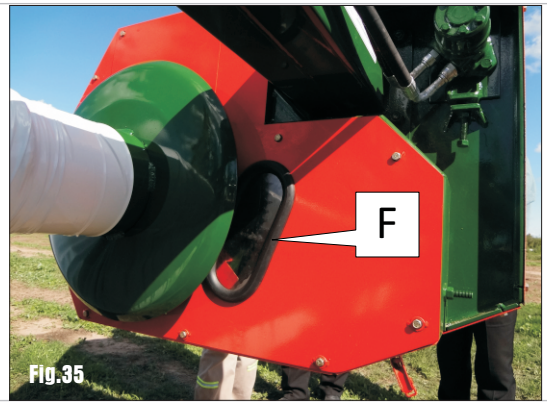

Fig.35

IMPORTANT:

Plastic sheet litter is an eyesore and doesn't help the environment. Inquire about recycling alternatives from your plastic bag supplier or local environmental agency.

c) Go forward with tractor and unloader until all of the used plastic is released from the roller and lies on the ground (Figs. 36 & 37).

Fig.36

Fig.37

11 Back to transport mode

Reverse the order of previous steps to set up the machine for transport:

a) Raise hydraulic cylinder to its maximum height, clamp all the stops on the cylinder rod and lower again to rest machine on stops. It is important to set highest clearance for the road.
b) Fold the discharge auger.
c) Disconnect hydraulic hoses and remove PTO drive shaft.
d) After lifting up the pivoting support stand, swivel roller cross beam ¼ of a circle into its transport position. Then remember to secure support stand to its base once again.
e) Turn cutter blade round so cutting edge faces inward.
f) Remove outer sweeper screws and grids so machine does not exceed road transport width allowance.
g) Hitch unloader to towing vehicle.

WARNING:

Never perform maintenance or lubrication tasks when there are moving parts. Always stop tractor's engine and remove the ignition key as an extra precaution.

To check for main drive chain slack, remove covers located on front part of frame and discharge auger tube, and adjust idler sprockets if needed.

Shear bolts

The drive shaft that connects to tractor's PTO is equipped with two shear bolts linking yoke and flange elements (Fig. 38).
They have been installed there to protect the unloader's driveline and transmission from overloads.
Should they have to be replaced, use soft low carbon steel **SAE 1010 or C10 bolts** of same diameter as the original.
Never use hardened steel bolts or pins as replacements.

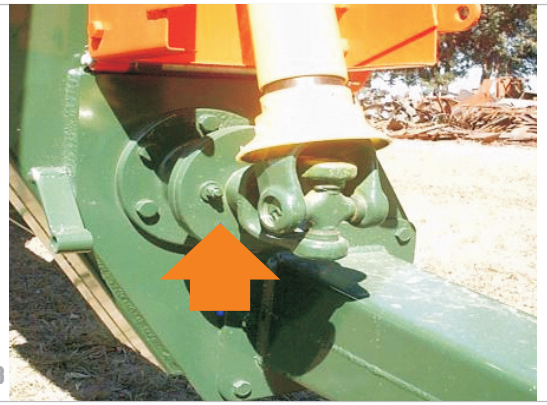

Fig.38

Lubrication

Roller gearbox, sweep auger and discharge auger transmission cases and chains:
Use **SAE 140 gear oil**.

Bearings and chains:
Use **heavy duty lithium grease.**

Gear oil filling procedure

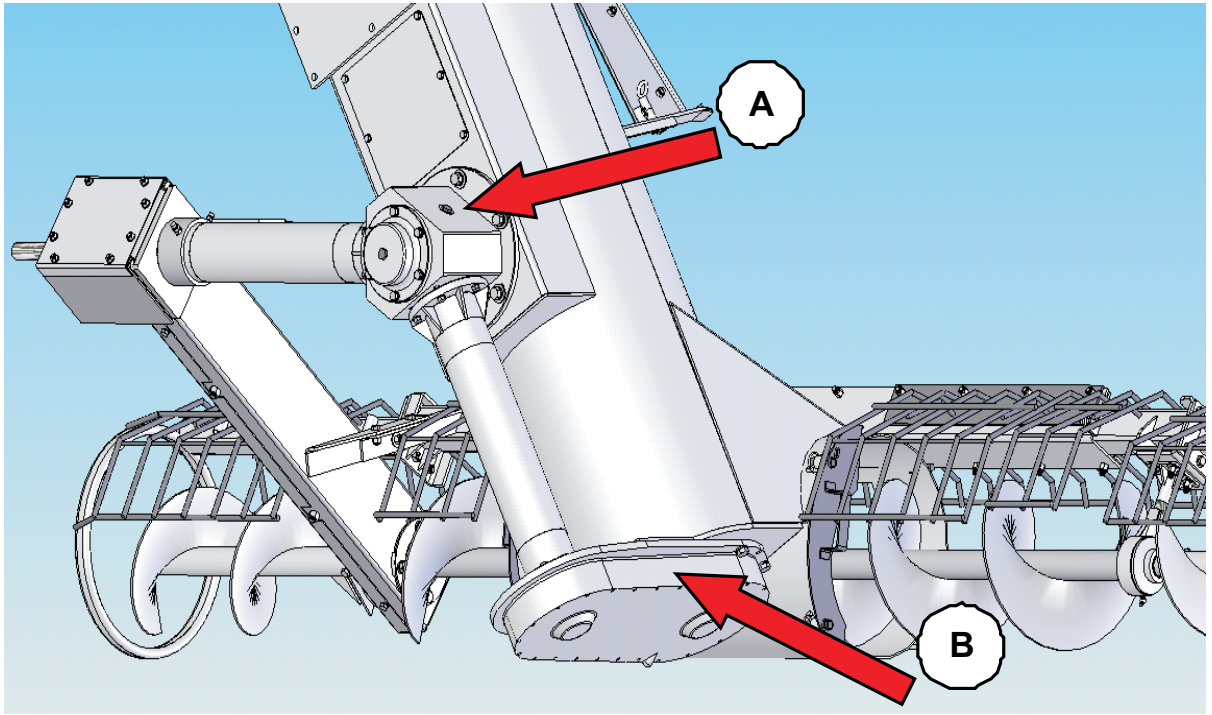

A) The driveline case shown in “A” takes about **4 liters of SAE 140 gear oil** in two stages. The filling procedure is as follows:

- Pour in oil until gear case “A” is full. This will require about two liters (slightly over half a gallon) of oil. Leave it standing for about 24 hours, or to speed up the process connect to tractor and drive the transmission for an hour, preferably with the fill plug removed to facilitate air venting.
- The oil will gradually drain down and once it does the gear case must be refilled with about two additional liters. Oil passage is slow, especially in low temperatures, and this is the reason why two filling steps are required. It helps if oil is warmed slightly.
- Before replacing the fill plug, turn transmission on. Any oil quantity in excess will be thrust out through the plug opening. Peering down, oil should be visible at about mid level to ensure proper gear lubrication. If oil surface is not visible, pour in some additional quantity.

B) The gear case shown in “B” is filled with about **3 liters of SAE 140 gear oil**. Oil is poured through the fill opening at the side of the gear case until oil reaches and flows out of the smaller drain opening. Both fill and drain plugs are then screwed on in place.

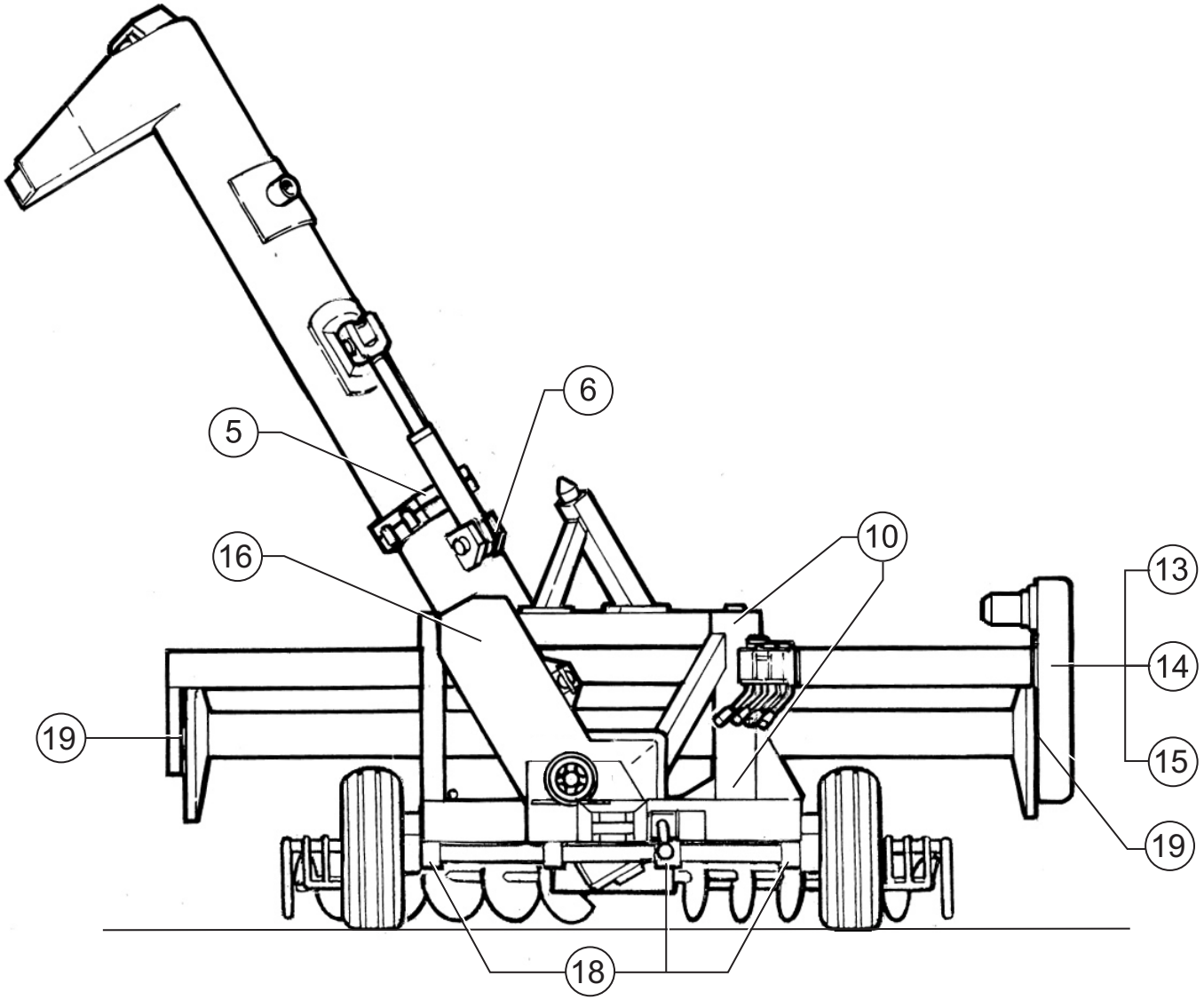
6
5
10
16
13
14
19
15
19
18

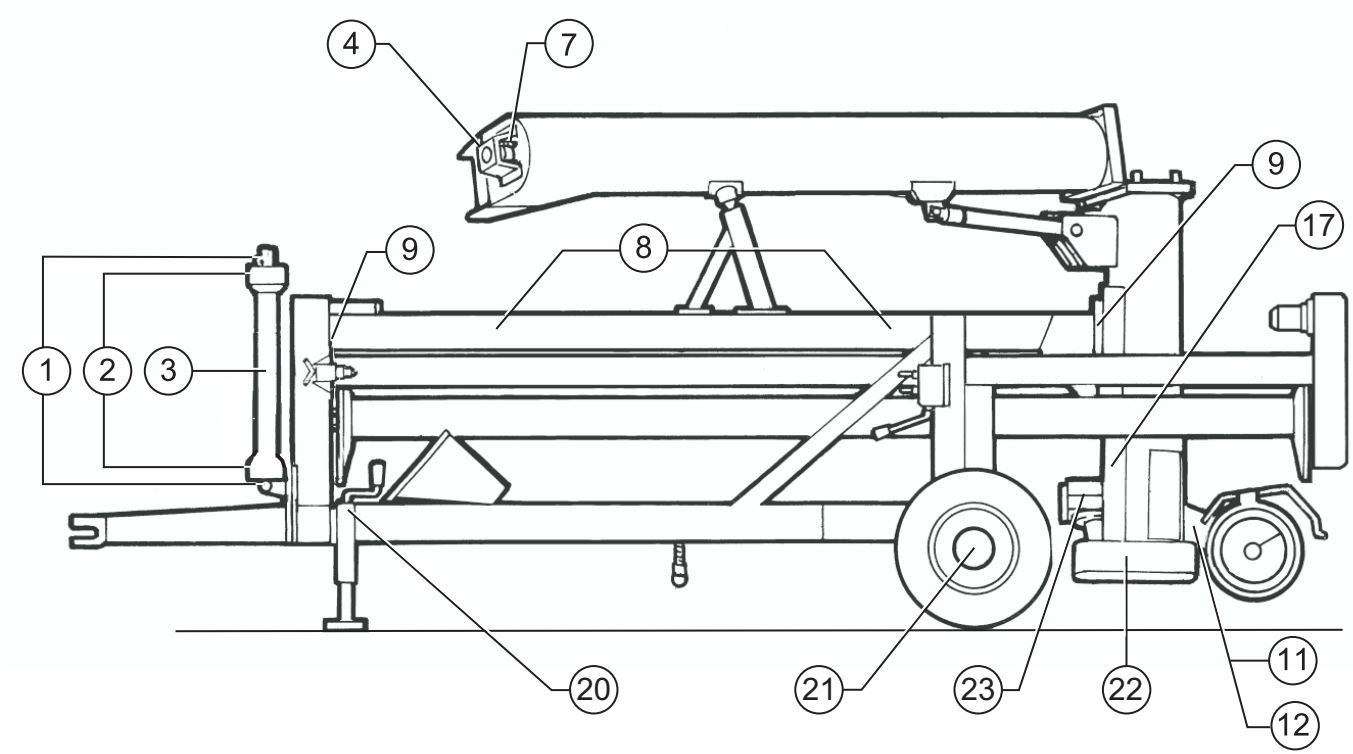
4
7
9
8
9
17
1
2
3
20
21
23
22
11
12

			Grease zerks (qty)	Lubricant	Interval in hours
1	PTO shaft	U-joints	2	Grease	8
2		Sliding shafts	Apply w/brush	Grease	16
3		Plastic shields	2	Grease	16
4	Discharge tube	Sliding bearing housing	1	Grease	50
5		Hinge assy.	4	Grease	50
6		Cylinder bushing	1	Grease	50
7		Compression springs	Apply w/brush	Grease	50
8	Drive shaft	Plastic bearing caps	2	Grease	50
9		Shaft bearing	2	Grease	50
10	Pivoting beam	Pivot bushing	2	Grease	50
11	Cross auger drive	Chain tensioner	2	Grease	50
12		Auger drive chain	Apply w/brush	Grease	50
13	Roller drive	Chain tensioner	1	Grease	50
14		Roller drive chain	Apply w/brush	Grease	50
15		Tri-lobed plates	2	Grease	50
16	Front drive	Front drive chain	Apply w/brush	Grease	50
17	Rear drive	Rear drive chain	Apply w/brush	Grease	50
18	Wheel spindles	Bearing caps	3	Grease	50
19	Roller	Roller bearings	2	Grease	50
20	Jack stand		1	Grease	50
21	Wheels	Hubs	2	Grease	100
22	Lower drive	Chain drive casing	-	Oil (3 liters)	100 (1)
23	Intermediate drive	Gearbox	-	Oil (5 liters)	100 (1)

Ref (1): SAE 140 oil level should be checked every 100 hours.

The aptitude of different kinds of grain to flow can be approximately determined by the angle formed by the sides of a mound lying on the ground. A steep angle indicates bad grain flow (Fig. 39) whilst a shallow angle indicates a good flow rate (Fig. 40).

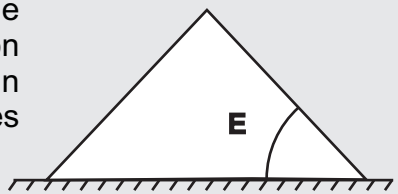

Fig.39

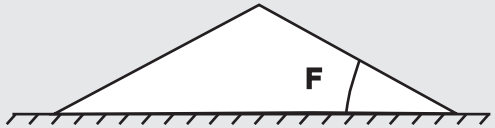

Fig.40

Some of the factors that contribute to good grain flow are the following:

Bigger grain size
Smooth outer surface
Round shaped grain
Dry grain
Clean grain

→ ***Low heap angle*** → ***Smooth flow, higher rate of extraction***

Examples of grains with good flow characteristics that can be unloaded at higher speeds are:

Corn below 21% moisture
Soybeans below 21% moisture
Wheat below 19% moisture

Grains that flow with more difficulty should be extracted at a slower pace as the higher speeds cannot be attained and if attempted the unloader could suffer mechanical damage. Examples of these grains are:

Corn above 22% moisture
Soybeans above 22% moisture
Wheat above 20% moisture
Sunflower
Oats
Barley
Paddy rice
Chickpeas

<u>Remember</u>: the whole working principle of the unloader rests upon the flow characteristics of grain.

17

Sweep auger efficiency is dependent on the type of grain being unloaded. The highest output measured in tons extracted per hour is obtained with grains that run well. Free running grain results in more efficient auger operation, a higher discharge rate and less stress on mechanical components.

The opposite is true of grain that does not run so well, that clusters together because of contamination with straw or twigs, excessive moisture, or because grain shape lends itself to interlocking. In these less than ideal conditions, work speed
is necessarily compromised.

The following drawings depict magnitudes A, B, C & D. The text that follows can help you assess how these parameters interact with each other and with different grains to help optimize operation:

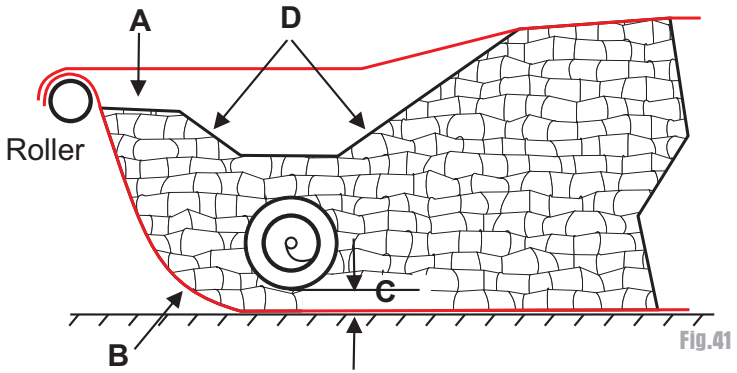

Fig.41

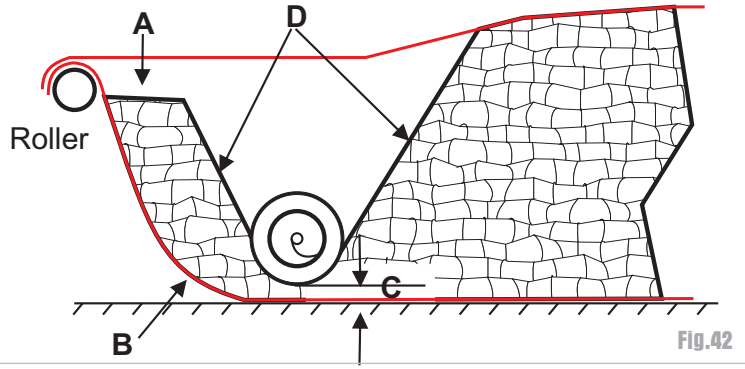

Fig.42

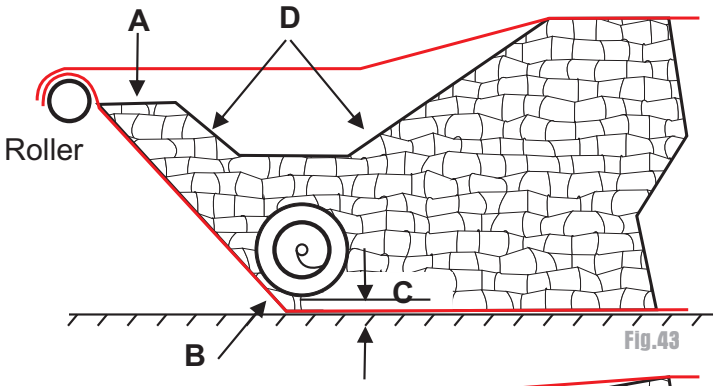

Fig.43

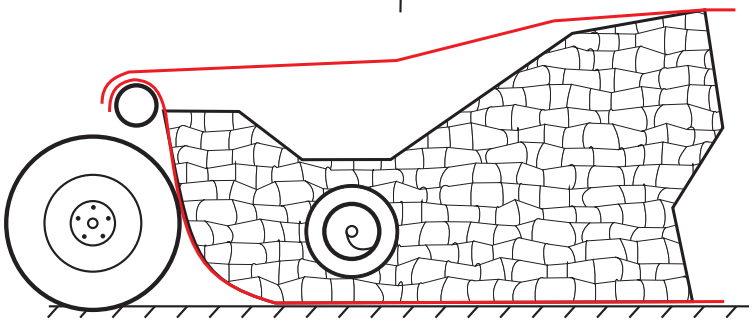
Fig.44

“A” is the height that grain within the bag can be taken to by increasing or reducing the pickup roller's RPM's. This level must not exceed the roller's height to prevent grain from being picked up with the plastic sheet. With this constraint, grain level should normally be maintained as high as possible so that, with the aid of gravity, it can readily fall back onto the sweep augers and be directed to the discharge auger.

"B" shows the curved shape that the front part of the bag should adopt - Figs. 41 & 42 - in order that the plastic sheet does not come in contact with the sweep augers or their protection grids with risk of ripping open and losing contents. The curvature is formed by the grain mass weighing down the tip of the bag as it is rolled in. When grain does not accumulate there, the plastic will tend to go up to the roller in a straight line - Fig. 43 - dangerously close to or actually touching the augers, with possibility of bag damage. With grain that flows easily (e.g. dry wheat), if the sweep augers are set with their normal low clearance to the ground (see "C" below), it can happen that due to quick passage, no layer of grain is left between the sweep augers and the floor. With no grain weighing down the bottom part of the bag and grain being unloaded at a very fast pace because it flows freely, it might not accumulate at the front as in fig. 41 but take on the shape shown in Fig. 43. In this case, sweeper height ("C") should be increased to permit some grain to pass beneath the sweepers without being gathered so that it can weigh down the bottom of the bag and collect at the front ("B"). However, if sweeper height is excessive, too much grain could accumulate there and project forward, making contact with the unloader's wheels (Fig. 44), a situation that should be avoided. The weight of grain contained within the curved shape "B" can reach tons. For that reason too it is important to pay close attention to grain level within the bag and prevent it from climbing above the roller as this will add even more volume and weight, the problem compounded by a large amount of grain that will immediately be pulled up by the roller along with the plastic, forming huge lumps of rolled material. If it goes unchecked, this progression could cause failure of mechanical components.

"C" is the clearance between sweep augers and bag bottom (or ground). This distance should be small so that the sweep augers lie low inside the bag and are well covered with grain, which ensures adequate delivery to the discharge auger. The clearance is set via clamp stops placed on the hydraulic cylinder rod. Since the augers should not touch the ground as this would endanger bag integrity, the convenience of placing the bags on terrain as flat as possible becomes clear. If the ground is rough, this will force operation with sweeper augers placed higher up than optimum because a rut will cause the unloader to dip, with the consequence of sweepers bumping against the ground and ripping the plastic. Especially with grain that clings together and flows badly, it is important to place the sweeper augers as low as possible. Generally speaking and in average conditions, low may be considered to be a clearance of about four to six inches from auger flighting to floor.

"D" indicates the slope or angle of grain inside the bag. Materials that flow easily will form a shallow slope Fig. 41 -, whilst those that do not will tend to form a steeper slope - Fig. 42 - that in extreme cases will flow only with great difficulty and could keep the augers uncovered and visible (or partially visible) while the machine is working, instead of fully covered with grain which constitutes the most desirable situation. Free flowing grain will typically cover the augers with a foot thick layer of grain. In relation to this, it is very important to remember that quick starting the augers deeply immersed in grain will most likely result in shear bolts that snap or transmission breakages. When labor is interrupted, PTO *must not be restarted when augers are deep inside grain*. The correct procedure is to unwind a certain length of plastic by hydraulically turning the roller in reverse and then advancing forward with tractor and unloader the distance it takes to extricate the augers from the mass of grain. When reinitiating work, augers should not be thrust into the grain by the tractor, but should be pulled into the mass of grain by roller action.

The main rule when dealing with difficult, hard flowing grain is to *slow down the operation.*
This means lessening the volume of incoming grain, which in turn means *slowing down the roller's revolutions per minute*.

Let us present a practical example applying some of the parameters mentioned above by analyzing an extraction of “difficult” grain in detail. Most of these indications are applicable grains in general, but grain that flows with difficulty better exemplifies the precautions that should be taken. Once the operator becomes knowledgeable about how the unloader handles different types of grain, using the correct approach becomes a matter of routine. The intention is not to impose a rigid set of rules, but to provide general guidelines that the operator can follow while he familiarizes himself with the machine.

If we consider a bag filled with grain that will not flow easily, in a situation such as depicted in Fig. 42, the grain forms a compact mass that the sweep augers can only penetrate with difficulty. The augers will move less quantity of grain per unit of time compared with free flowing material.

A) *First adjust “C” so that sweeper distance to the ground is the minimum possible*. This allows the augers to tackle the mass of grain from a lower point, so that more grain can accumulate above them and form a steeper angle “D”. This will cause the wall of grain to tumble down more readily and better feed the augers. Remember that minimum is a relative term and can very well mean 4 or 6 inches or more from the floor, to compensate for the unloader lurching into a hole or depression and causing the augers to thump on the ground and rip the plastic. *Therefore, sweeper clearance “C” will tend to increase with ground bumpiness.*

B) When backing up the tractor into the bag, *the unloader must never be rammed forcefully* against the grain as this can damage the sweeper augers or even bend the beam that supports them. The unloader should be introduced with prudence in the bag and the augers should not penetrate the mass of grain, but make light contact with it. *See warning (above in “D” section) about not initiating work with augers surrounded by grain.*

C) *The PTO should always work within its normal 500/540 rpm range,* not slower. Whatever grain characteristics are, PTO revs are not reduced and augers work at a uniform speed.

D) Once the bag has been hooked to the roller and the augers are moving, the operator should begin to haul in the bag by gradually turning open the hydraulic flow control valve (with the roller control lever in its upper position).

E) Grain will start coming out of the discharge auger and simultaneously it will start building up inside the bag to form shape “B” with a certain gradient “D”. The operator should allow a buildup of grain that will probably take a few minutes to reach point “A”.

F) *If level of grain inside bag goes too high the roller must be slowed down* to allow more grain to be removed by the sweeper and discharge augers. *Grain picked up and rolled as one with the plastic sheet is the telltale sign that should be watched out for.* The roller extremes where the plastic folds converge on the centering discs is where grain is more likely to collect. If grain is being picked up then roller speed has to be reduced. If the roller picks up too much grain resulting in prominent and growing bulges under the plastic, it will be necessary to stop operation, cut the bag, remove plastic sheet from roller, and reinitiate operation.

G) *If grain height reaches point “A”, where a substantial amount of grain is being unloaded with none being picked up by the roller, then roller speed should be stabilized there*. Usually point “A” is the highest point that the grain can reach without being pulled in with the plastic folds, but the actual clearance to the roller measured in centimeters can vary. When this plateau is reached, the roller is turning at the correct speed.

H) This is the point of equilibrium where inflow and outflow of grain are equal. The amount of grain that can be handled has reached its peak. *Increasing discharge speed should not be attempted at this stage* since no benefit in terms of time or volume will be obtained and failure of mechanical parts is a possibility.

I) *If in doubt, first always try working slower before increasing speed in a gradual manner.*

It is important, in order to avoid accidents that affect oneself and others, to be familiar with the operation of agricultural machinery.

Therefore, please follow these guidelines:

1. Allow only people with a working knowledge of the machine, controls and safety rules to operate it.
2. Verify that all safety and instructional decals are in place and in good condition. If they're not, replace them.
3. For machinery that uses the PTO:

   a) Confirm that all protective shields are in place and do not interfere with moving parts. Drive shaft shields should be secured with chains to prevent them from turning.
   b) Follow instructions regarding minimum coupling lengths for drive shaft sections. Disconnection during operation can have dire consequences.
   c) Check correct PTO rpm's indicated for your machine, either 540 or 1,000.

4. Do not tow agricultural machinery with automotive vehicles at high speeds on public roads. They are mostly designed to be towed by tractors on country roads at low speeds of not more than 15 mph.
5. Make sure the total width of machinery you are towing on public roads does not exceed what is legally permitted. Use signaling lights or banners, or travel with a signaling companion vehicle.
6. Do not allow people on machines, either working or in transport.
7. Check that all nuts and bolts are properly tightened.
8. Follow maintenance indications detailed in user's manual.
9. Do not attempt to revise or repair anything if there are moving parts or tractor's engine is running.
10. Hands, feet, hair and loose clothing are especially at risk of being snagged by moving shafts and driveline components. Operator should use adequate shoes and tight fitting clothes, and avoid using rings, watches, chains or other types of jewelry. He should also wear head, eye and ear protection if necessary.
11. In all machines equipped with hydraulic circuits used for elevation or rotation, do not perform maintenance work without ensuring that:
    a) Engine is off.
    b) Nobody has ignition keys to inadvertently turn engine on.
    c) Safety stops are in place
    d) There are supporting stands between machine and ground.
12. Ensure that operator is familiar with fire hazard procedures and proficient with a fire extinguisher.

Following all safety routines involves a high degree of responsibility. Be responsible to yourself and others.

Hand signals

Hand signals have been developed to provide a uniform means of communication between workers on the ground and equipment operators. They are especially useful when noise, distance, or language barriers make voice communication difficult.

There are eleven recognized hand signals found in ASAE Standard S351. They are illustrated here in figures.

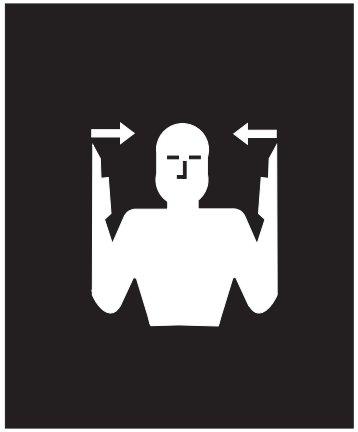

Fig. 1 THIS FAR TO GO.
Put hands in front of face, palms facing each other. Move hands together or farther apart to indicate how far to go.

Fig. 2 COME TO ME.
(May mean “Come help me” in an emergency). Raise arm straight up palm to the front and move arm around in a large circle.

Fig. 3 MOVE TOWARD ME FOLLOW ME.
Look toward person or vehicle you want moved. Hold one hand in front of you, palm facing you, and move your forearm back and forth.

Fig. 4 MOVE OUT TAKE OFF.
Face desired direction of movement. Extend arm straight out behind you, then swing it overhead and forward until it's straight out in front of you.

Fig. 5 STOP.
Raise arm straight up, palm to the front.

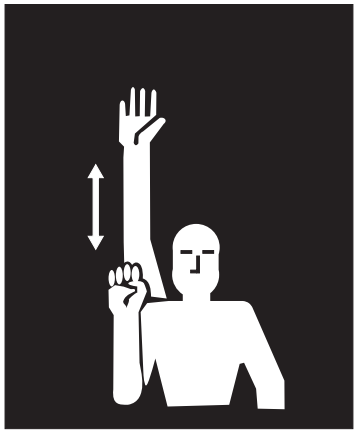

Fig. 6 SPEED IT UP. Clenching your fist, bend your arm so your hand is at shoulder level. Thrust arm rapidly straight up and down several times.

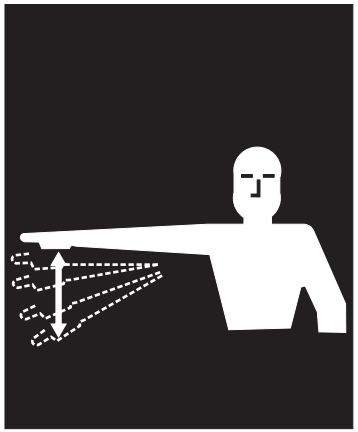

Fig. 7 SLOW IT DOWN. Extend arm straight out to the side palm down. Keeping arm straight, move it up and down several times.

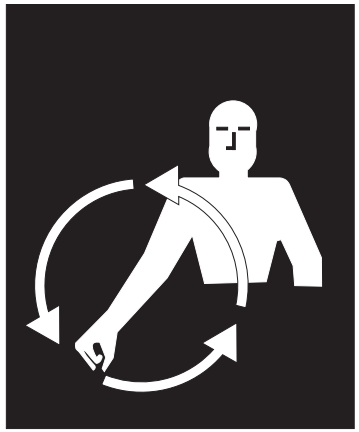

Fig. 8 START THE ENGINE. Move arm in a circle at waist level as though you were cranking an engine.

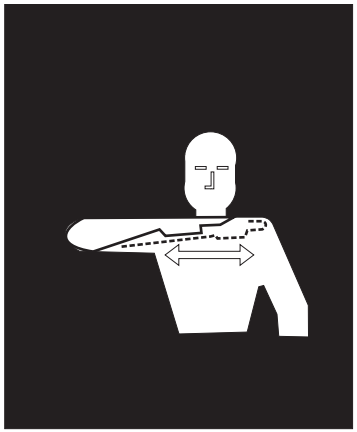

Fig. 9 STOP THE ENGINE. Move your right arm across your neck from left to right in a “throat-cutting” motion.

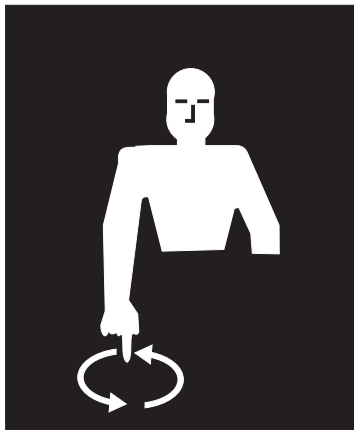

Fig. 10 LOWER EQUIPMENT. Point toward the ground with the forefinger of one hand while moving the hand in a circle.

Fig. 11 RAISE EQUIPMENT. Point upward with forefinger, while making a circle at head level with your hand.

Parts list

20

Sheet N° 1 - PTO driveline & wheels	page 36
Sheet N° 2 - Frame	page 38
Sheet Nº 3 - Front end driveline & main drive shaft	page 40
Sheet Nº 4 - Roller coupling mechanism	page 42
Sheet Nº 5 - Roller drive	page 44
Sheet Nº 6 - Gear plate & covers	page 46
Sheet Nº 7 - Pivoting beam, roller assy.	page 48
Sheet Nº 8 - Discharge auger, upper section	page 50
Sheet Nº 9 - Discharge auger, lower section	page 52
Sheet Nº 10 - Rear end driveline	page 54
Sheet Nº 11 - Gear case	page 56
Sheet Nº 12 - Sweep auger drive	page 58
Sheet Nº 13 - Sweep augers	page 62
Sheet Nº 14 - Hydraulic controls	page 64
Sheet Nº 15 - Hydraulic circuit	page 66

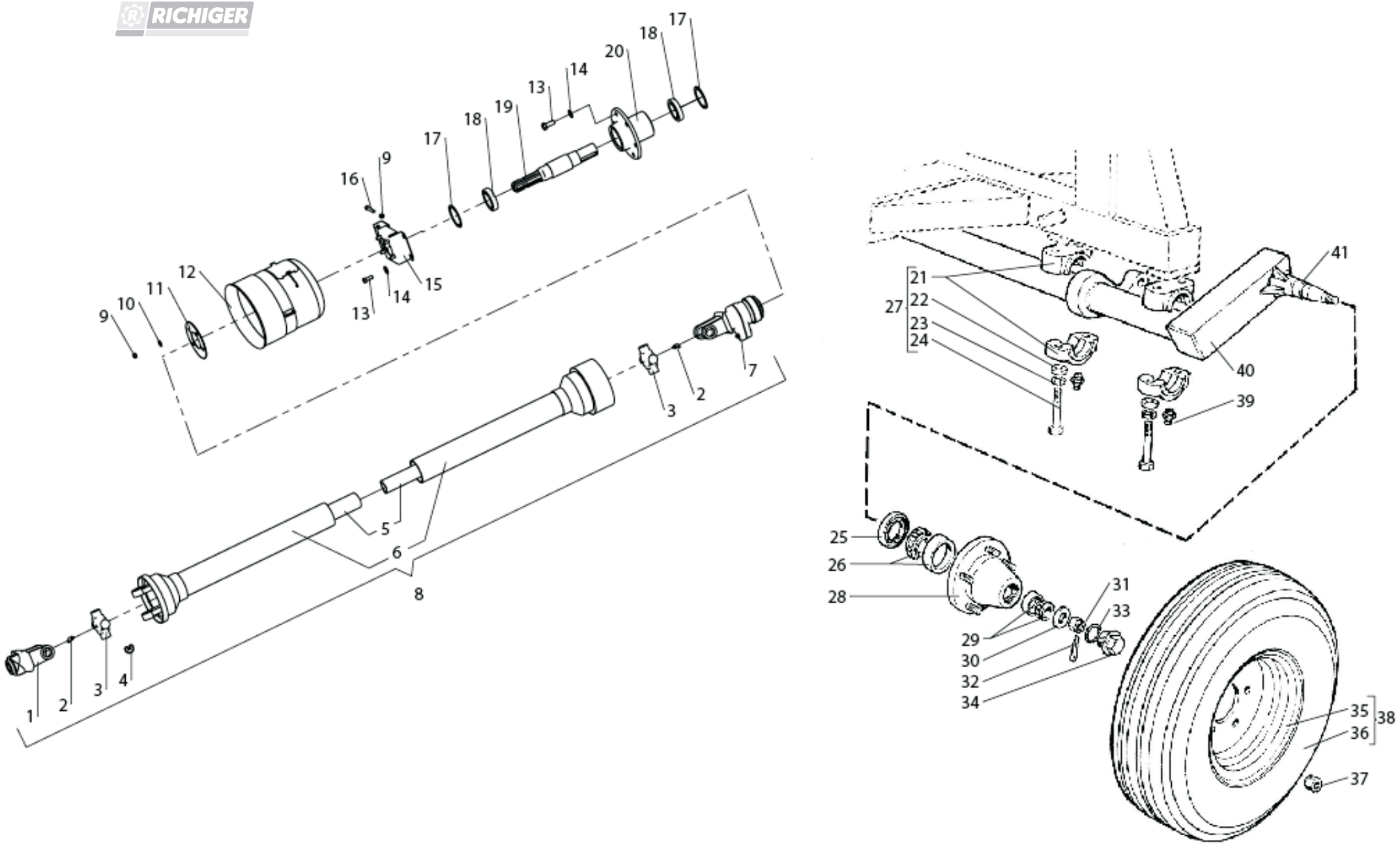

EA 910

Sheet N° 1 - PTO driveline & wheels

EA-910 - Sheet N° 1 - PTO driveline & wheels			
Nº	Description	Code	Qty.
1	Splined yoke x 35 mm	MCBA01007	1
2	Grease zerk, 45° angle SAE 1/4"	MCAL01001	2
3	U-joint K-518	MCBA01017	2
4	Snap ring	MCBA01061	8
5	PTO drive shaft x 800 mm	MCBA01106	1
6	Plastic shield, drive shaft	MCBA01070	1
7	Power limiter	MCBA01037	1
8	Main drive shaft assembly	MCBA00022	1
9	Self locking nut BSW 5/16"	MCTU06002	8
10	Flat washer galvanized 5/16"	MCAR00004	4
11	Retaining washer, plastic shield	CDBQ00036	1
12	Plastic shield, PTO	CDBZ00112	1
13	Hex bolt gr. 5 BSW 1/2" x 1 3/4"	MCBU00027	6
14	Disc springs 1/2" (24x13x2,8 mm)	MCAR03002	6
15	Plastic shield bracket	CDBZ50062	1
16	Hex bolt gr. 5 BSW 5/16"x2"	MCBU00059	4
17	Snap ring 75I DIN472	MCSE00009	2
18	Bearing 6009 2RS	MCRO00001	2
19	Drive shaft, short	CDBW00174	1
20	Drive shaft housing	CDBV00025	1

EA-910 - Sheet N° 1 - PTO driveline & wheels			
Nº	Description	Code	Qty.
21	Bearing cap, wheel axle	CDBZ50071	3
22	Flat washer 3/16" OD 35 / ID 20 (mm.)	CDAA42008	6
23	Disc springs 3/4" (40x20,4x2,25 mm)	MCAR01001	6
24	Hex bolt gr. 5 NF 3/4"x5"	MCBU02039	6
25	Oil seal 48x82x8 mm	MCRE00036	2
26	Bearing 30208	MCRO06006	2
27	Bearing cap, wheel axle	CDBZ50072	3
28	Wheel hub	CDBW50056	2
29	Bearing 30205	MCRO06003	2
30	Flat washer 3/16" OD 35 / ID 20 (mm.)	CDAA42008	2
31	Castle nut NF 3/4"	MCTU10003	2
32	Split pin 3x40 mm	MCCH01017	2
33	O-ring seal 52,07x57,31x2,62mm	MCRE01019	2
34	Hub cap	CDBE00026	2
35	Tire rim 15"	MCLL00020	2
36	Tire 11L-15 10 ply	MCCC00020	2
37	Conical bolt, 1/2" NF galvanized	MCTU12003	10
38	Wheel assembly w/ 11-15/10 ply tire	MCLL50012	2
39	Grease zerk, straight SAE 1/8"	MCAL00001	3
40	Main wheel axle assy.	CDBW50066	1
41	Axle spindle	CDBW00164	2

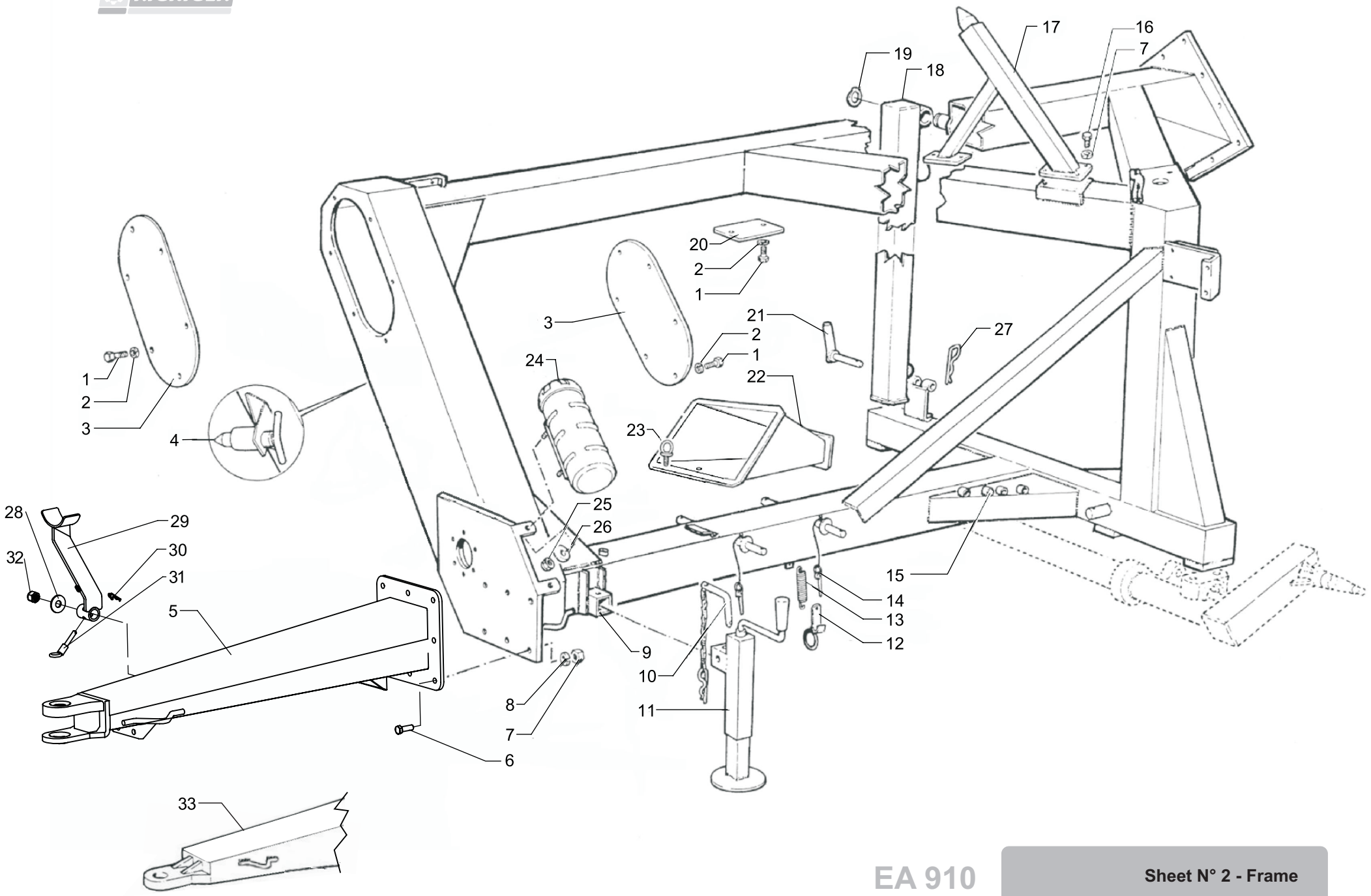

EA 910

Sheet N° 2 - Frame

EA-910 - Sheet N° 2 - Frame			
Nº	Description	Code	Qty.
1	Hex bolt gr. 5 BSW 1/4"x5/8"	MCBU00004	16
2	Disc springs 1/4" (14x7,2x0,8 mm)	MCAR01005	16
3	Cover plate, chain 1"	CDBW00227	2
4	Spring loaded lock pin	CDBW50067	1
5	Drawbar	CDBW50085	1
6	Hex bolt gr. 5 BSW 1/2"x1 1/2"	MCBU00026	8
7	Hex nut gr. 5 BSW 1/2"	MCTU00005	5
8	Disc springs 1/2" (24x13x2,8 mm)	MCAR03002	12
9	Square socket, screw jack	CDAA52002	1
10	Hitch pin w/ R-clip, screw jack	CDAA52003	1
11	Screw jack	CDAA52001	1
12	Latch, protection grids	CDBW50068	4
13	Extension spring 2 x 15 x 100 mm	MCRS00002	4
14	R-clip w/ring	MCCH03001	4
15	Support bracket, grid extension	CDBW00260	4
16	Hex bolt gr. 5 BSW 1/2"x1"	MCBU00024	4
17	Support bracket, discharge auger	CDBW50069	1
18	Supporting pillar, roller assy.	CDBW50070	1
19	Snap ring 35A DIN471	MCSE01010	1
20	Cover plate, frame beam	CDBW00228	2
21	Lock pin, roller support pillar	CDBW50057	1
22	Auxiliary bin	CDBW00137	1
23	Wing bolt 3/8"	CDBE50011	1
24	User's manual canister	MCPL00013	1
25	Self locking nut BSW 3/8"	MCTU06001	2
26	Flat washer galvanized 3/8"	MCAR00005	2
27	R-clip 2.5x50 mm	MCCH00001	3
28	Flat washer galvanized 5/8"	MCAR00009	1
29	Bracket, drive shaft	CDBZ50059	1
30	R-clip 2x40 mm	MCCH00009	1
31	Lock pin, cutter blade	CDBW50020	1
32	Self locking nut BSW 5/8"	MCTU06005	1
33	Drawbar	CDBW50052	1

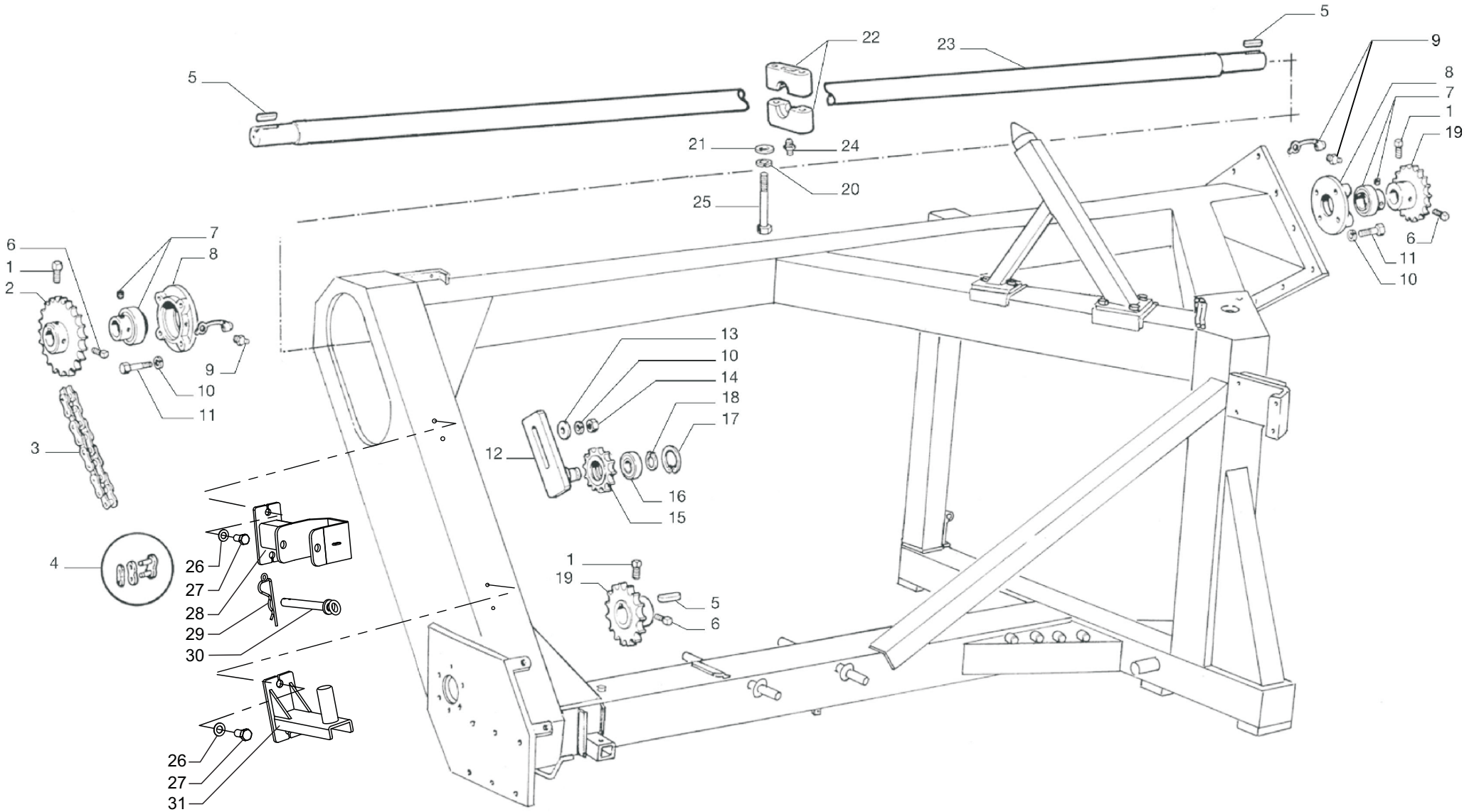

EA 910

Sheet Nº 3 -
Front end driveline & main drive shaft

EA-910 - Sheet Nº 3 - Front end driveline & main drive shaft			
Nº	**Description**	**Code**	**Qty.**
1	Square head set screw 3/8"x1/2"	MCPR00012	3
2	Sprocket 22 tooth f/ASA 80/1 chain	CDBW00007	1
3	Roller chain ASA 80/1	CDBW00270	1
4	Connecting link, ASA 80/1 roller chain	MCCA01017	1
5	Square key 10x10x50 (mm.)	CDBW00048	3
6	Square head set screw 3/8"x3/4"	MCPR00014	3
7	Bearing UC-208	MCRO12005	2
8	Bearing housing for bearing UC-208	CDAA51034	2
9	Grease zerk, straight SAE 1/4"	MCAL00002	2
10	Disc springs 1/2" (24x13x2,8 mm)	MCAR03002	9
11	Hex bolt gr. 5 BSW 1/2"x2"	MCBU00028	8
12	Idler arm, front	CDBW50048	1
13	Flat washer galvanized 1/2"	MCAR00007	1
14	Hex nut gr. 5 BSW 1/2"	MCTU00005	1
15	Idler sprocket 12 tooth f/ASA 80/1 chain	CDBW00006	1
16	Bearing 6205 2RS	MCRO00017	1
17	Snap ring 52I DIN472	MCSE00004	1
18	Snap ring 25A DIN471	MCSE01006	1
19	Sprocket 17 tooth f/ASA 80/1 chain	CDBW00005	2
20	Disc springs 3/8" (20x10,2x0.8 mm)	MCAR01006	4
21	Flat washer galvanized 3/8"	MCAR00005	4
22	Bearing cap, drive shaft	MCPL00006	2
23	Long drive shaft	CDBW00182	1
24	Grease zerk, straight SAE 1/8"	MCAL00001	2
25	Hex bolt gr. 5 BSW 3/8"x5"	MCBU00023	4
26	Disc springs 1/2" (24x13x2,8 mm)	MCAR03002	4
27	Hex bolt gr. 5 BSW 1/2"x1"	MCBU00024	4
28	Upper bracket, drive shaft	CDBR50002	1
29	R-clip 4x100 mm	MCCH00008	1
30	Lower bracket, drive shaft	CDBR50003	1

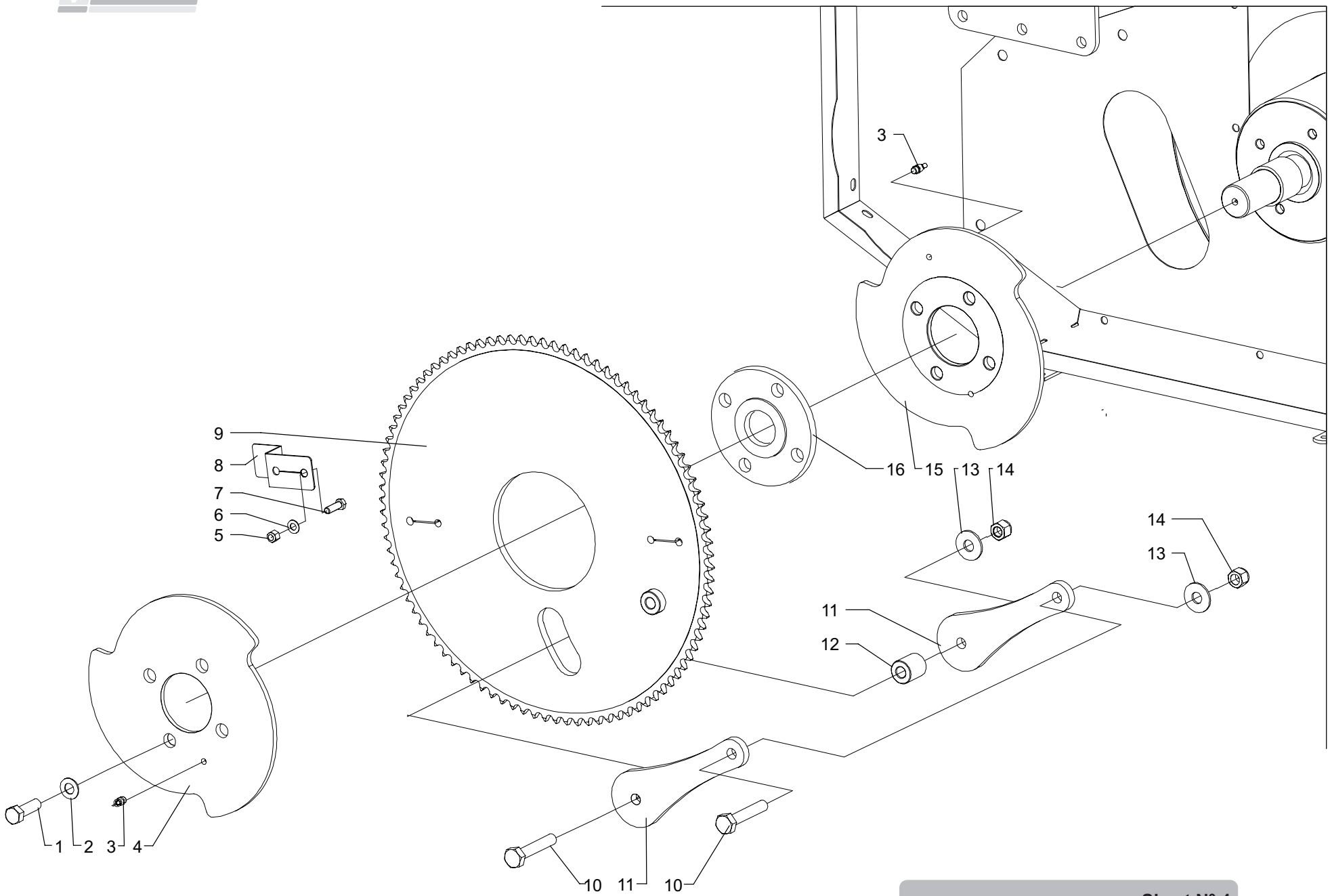

EA 910

Sheet Nº 4
Roller coupling mechanism

EA-910 - Sheet Nº 4 - Roller coupling mechanism			
Nº	**Description**	**Code**	**Qty.**
1	Hex bolt gr. 5 BSW 5/8"x2"	MCBU00037	4
2	Disc springs 5/8" (31,5x16,3x1,75 mm)	MCAR01003	4
3	Grease zerk, 45° angle SAE 1/8"	MCAL01004	3
4	Engaging plate, RH	CDDF00010	1
5	Self locking nut BSW 3/8"	MCTU06001	2
6	Disc springs 3/8" (20x10,2x0.8 mm)	MCAR01006	2
7	Hex bolt gr. 5 BSW 3/8"x1 1/4"	MCBU00008	2
8	Disengage point indicator	CDDF00012	1
9	Sprocket 95 tooth f/ASA 60/1 w/ bronze bushing	CDDF50004	1
10	Hex bolt BSW 5/8"x3 1/2"	MCBU01084	2
11	Coupling arm	CDDF00009	2
12	Bushing	CDDF00005	1
13	Flat washer galvanized 5/8"	MCAR00009	2
14	Self locking nut BSW 5/8"	MCTU06005	2
15	Engaging plate, LH	CDDF00011	1
16	Intermediate flange	CDDF00006	1

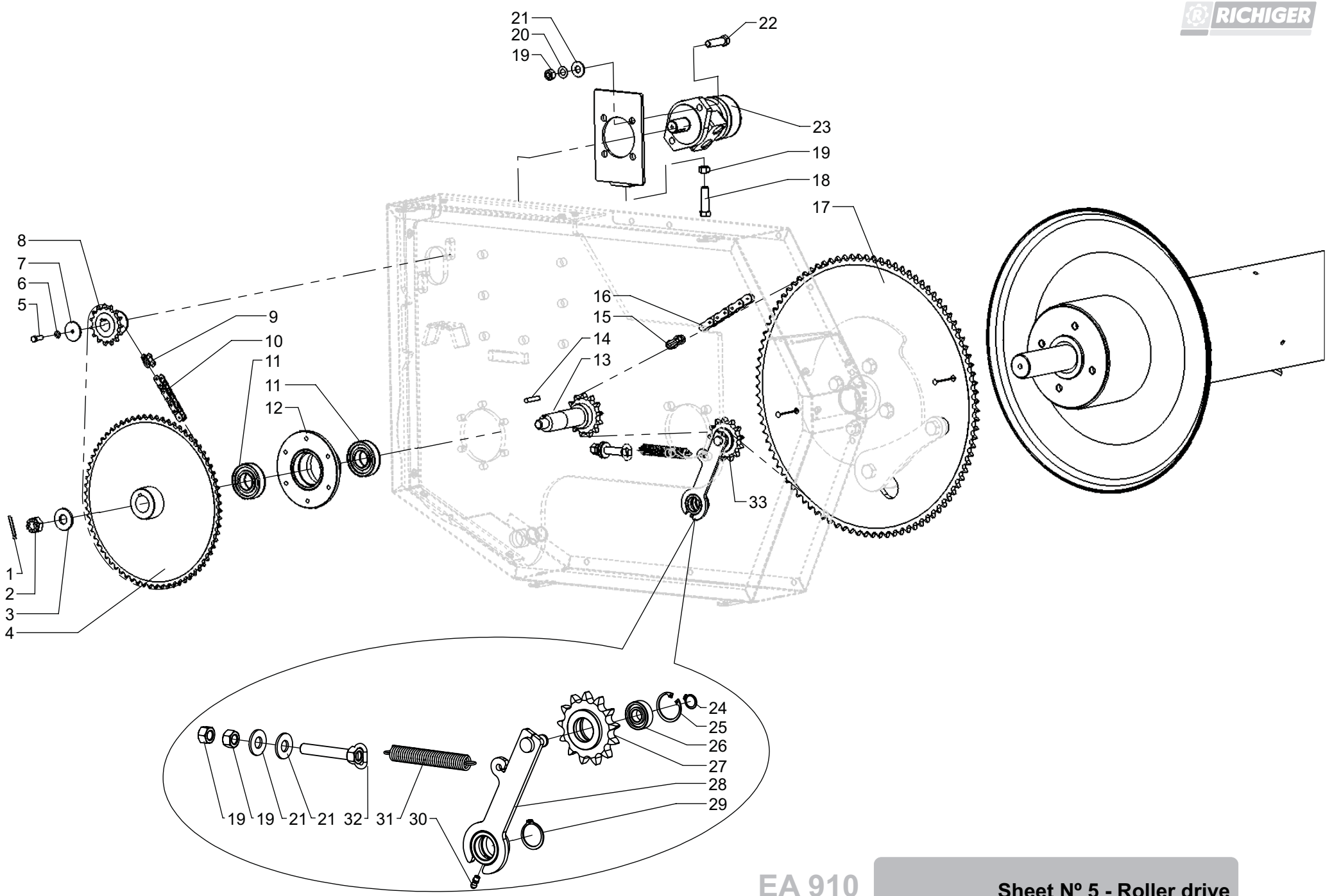

EA 910

Sheet Nº 5 - Roller drive

EA-910 - Sheet Nº 5 - Roller drive			
Nº	**Description**	**Code**	**Qty.**
1	Split pin 3x40 mm	MCCH01017	1
2	Hex nut BSW 3/8"	MCTU01003	1
3	Flat washer 3/16" OD 45/ ID 20 mm	CDAA42017	1
4	Sprocket 95 tooth f/ASA 60/1	CDDF50010	1
5	Hex bolt gr. 5 BSW 1/4"x1"	MCBU00021	1
6	Disc springs 1/4" (14x7,2x0,8 mm)	MCAR01005	1
7	Flat washer 1/8" OD 40/ ID 07 mm	CDAA42041	1
8	Sprocket 15 tooth, hydraulic motor	CDBG00020	1
9	Connecting link, ASA 50/1 roller chain	MCCA01015	1
10	Roller chain ASA 50	CDDF00042	1
11	Bearing 6207 2RS	MCRO00021	2
12	Bearing housing for bearing 6207	CDDF50007	1
13	Spindle	CDDF50008	1
14	Square key 8x8x40 mm	CDBZ00061	1
15	Connecting link, ASA 60/1 roller chain	MCCA01016	1
16	Roller chain ASA 60	CDDF00039	1
17	Sprocket 95 tooth f/ASA 60/1 w/ bronze bushing	CDDF50004	1
18	Hex bolt gr. 5 BSW 1/2"x2"	MCBU00069	1
19	Hex nut gr. 5 BSW 1/2"	MCTU00005	4
20	Disc springs 1/2" (24x13x2,8 mm)	MCAR03002	2
21	Flat washer galvanized 1/2"	MCAR00007	2
22	Hex bolt gr. 5 BSW 1/2"x2"	MCBU00028	2
23	Hydraulic motor, 250 cc	MCHI01008	1
24	Snap ring 15A DIN471	MCSE01020	1
25	Snap ring 35I DIN472	MCSE00011	1
26	Bearing 6202 2RS	MCRO00011	1
27	Tightener	CDDF50016	1
28	Tightener arm	CDDF50015	1
29	Snap ring 30A DIN471	MCSE01008	1
30	Grease zerk, straight SAE 1/4"	MCAL00002	1
31	Extension spring 2,5 x 19 x 135 mm	MCRS00003	1
32	Threaded spring tensioner	CDBW50086	1
33	Complete chain tightener assy.	CDDF50009	1

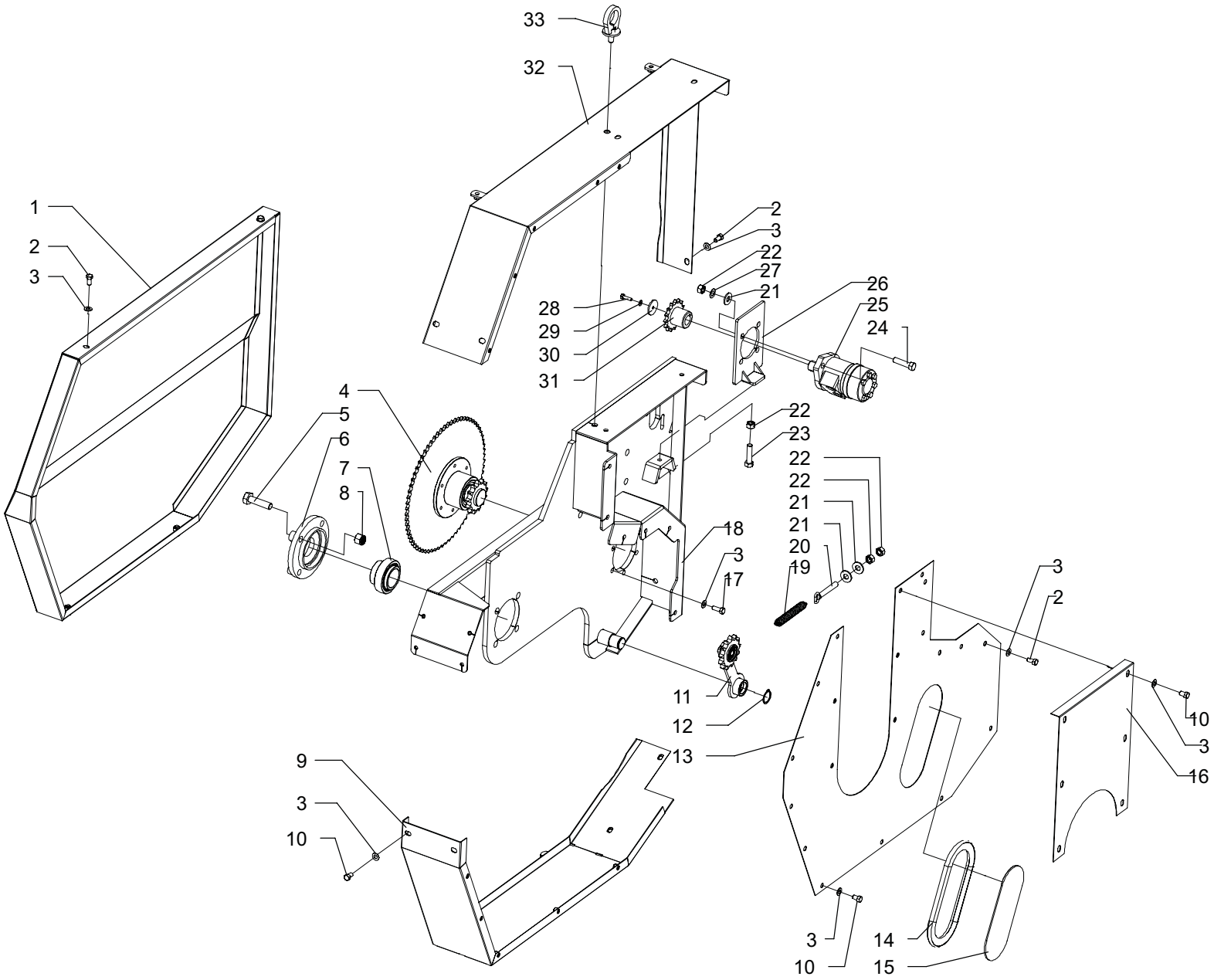

EA 910

Sheet Nº 6 - Gear plate & covers

EA-910 - Sheet Nº 6 - Gear plate & covers			
Nº	**Description**	**Code**	**Qty.**
1	Chain cover	CDDF50014	1
2	Hex bolt gr. 5 BSW 3/8"x3/4"	MCBU00005	10
3	Disc springs 3/8" (20x10,2x0.8 mm)	MCAR01006	40
4	Complete sprocket assy.	CDDF50020	1
5	Hex bolt gr. 5 BSW 5/8"x2 1/2"	MCBU00039	4
6	Bearing housing for bearing UC-210	CDAA51041	1
7	Bearing UC-210	MCRO12007	1
8	Self locking nut BSW 5/8"	MCTU06005	4
9	Lower cover section	CDDF50011	1
10	Hex bolt gr. 5 BSW 3/8"x5/8"	MCBU00031	18
11	Complete chain tightener assy.	CDDF50009	1
12	Snap ring 30A DIN471	MCSE01008	1
13	Back cover	CDDF50013	1
14	Rubber strip	CDBF00023	1
15	Acrylic window	CDBF00021	1
16	Supplementary back cover	CDDF00015	1
17	Hex bolt gr. 5 BSW 3/8"x1"	MCBU00007	6
18	Gear plate	CDDF50006	1
19	Extension spring 2,5 x 19 x 135 mm	MCRS00003	1
20	Threaded spring tensioner	CDBW50086	1
21	Flat washer galvanized 1/2"	MCAR00007	6
22	Hex nut gr. 5 BSW 1/2"	MCTU00005	7
23	Hex bolt gr. 5 BSW 1/2"x2"	MCBU00069	1
24	Hex bolt gr. 5 BSW 1/2"x2"	MCBU00028	2
25	Hydraulic motor, 250 cc	MCHI01008	1
26	Attachment plate, hydraulic motor	CDBW50061	1
27	Disc springs 1/2" (24x13x2,8 mm)	MCAR03002	4
28	Hex bolt gr. 5 BSW 1/4"x1"	MCBU00021	1
29	Disc springs 1/4" (14x7,2x0,8 mm)	MCAR01005	1
30	Flat washer 1/8" OD 40/ ID 07 mm	CDAA42041	1
31	Sprocket 15 tooth, hydraulic motor	CDBG00020	1
32	Upper cover section	CDDF50012	1
33	Ring bolt	CDDF50018	1

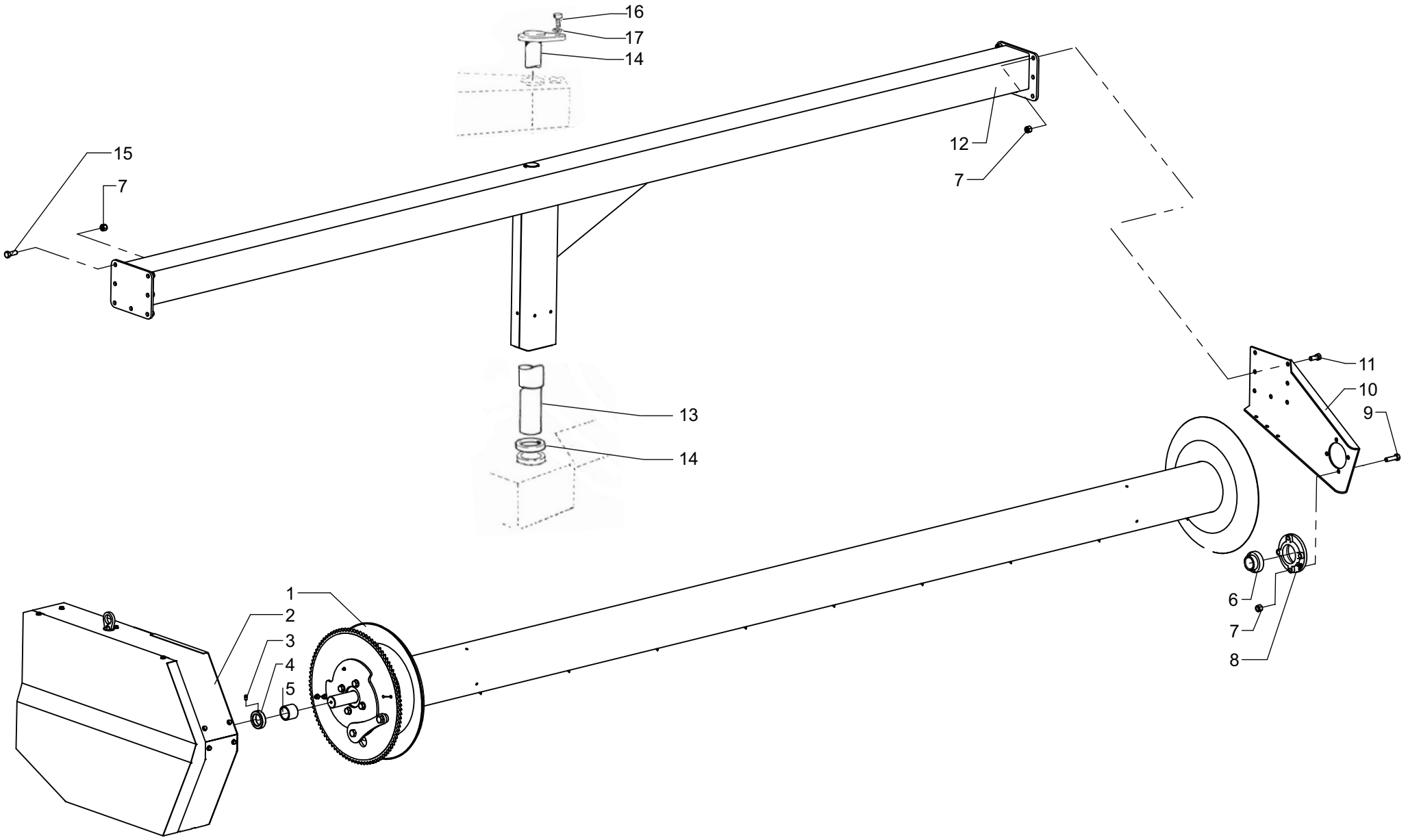

EA 910

Sheet Nº 7
Pivoting beam, roller assy.

EA-910 - Sheet Nº 7 - Pivoting beam, roller assy.			
Nº	**Description**	**Code**	**Qty.**
1	Bag roller w/end sprocket assy.	CDDF50002	1
2	Complete gear plate assy.	CDDF50005	1
3	Square head set screw 3/8"x1/2"	MCPR00012	1
4	End cap, spindle	CDBW00217	1
5	Spacer	CDDF00013	1
6	Bearing UC-210	MCRO12007	1
7	Self locking nut BSW 5/8"	MCTU06005	1
8	Bearing housing for bearing UC-210	CDAA51041	1
9	Hex bolt gr. 5 BSW 5/8"x2 1/4"	MCBU00038	1
10	Mounting bracket	CDDF00014	4
11	Hex bolt gr. 5 BSW 5/8"x1 1/2"	MCBU00035	1
12	Pivoting beam, roller assy.	CDDF50017	7
13	Pivot pin, roller assy.	CDBW50065	1
14	Washer, pivot pin	CDBW00192	1
15	Hex bolt gr. 5 BSW 5/8"x1 3/4"	MCBU00036	7
16	Hex bolt gr. 5 BSW 1/2"x1"	MCBU00024	1
17	Disc springs 1/2" (24x13x2,8 mm)	MCAR03002	1

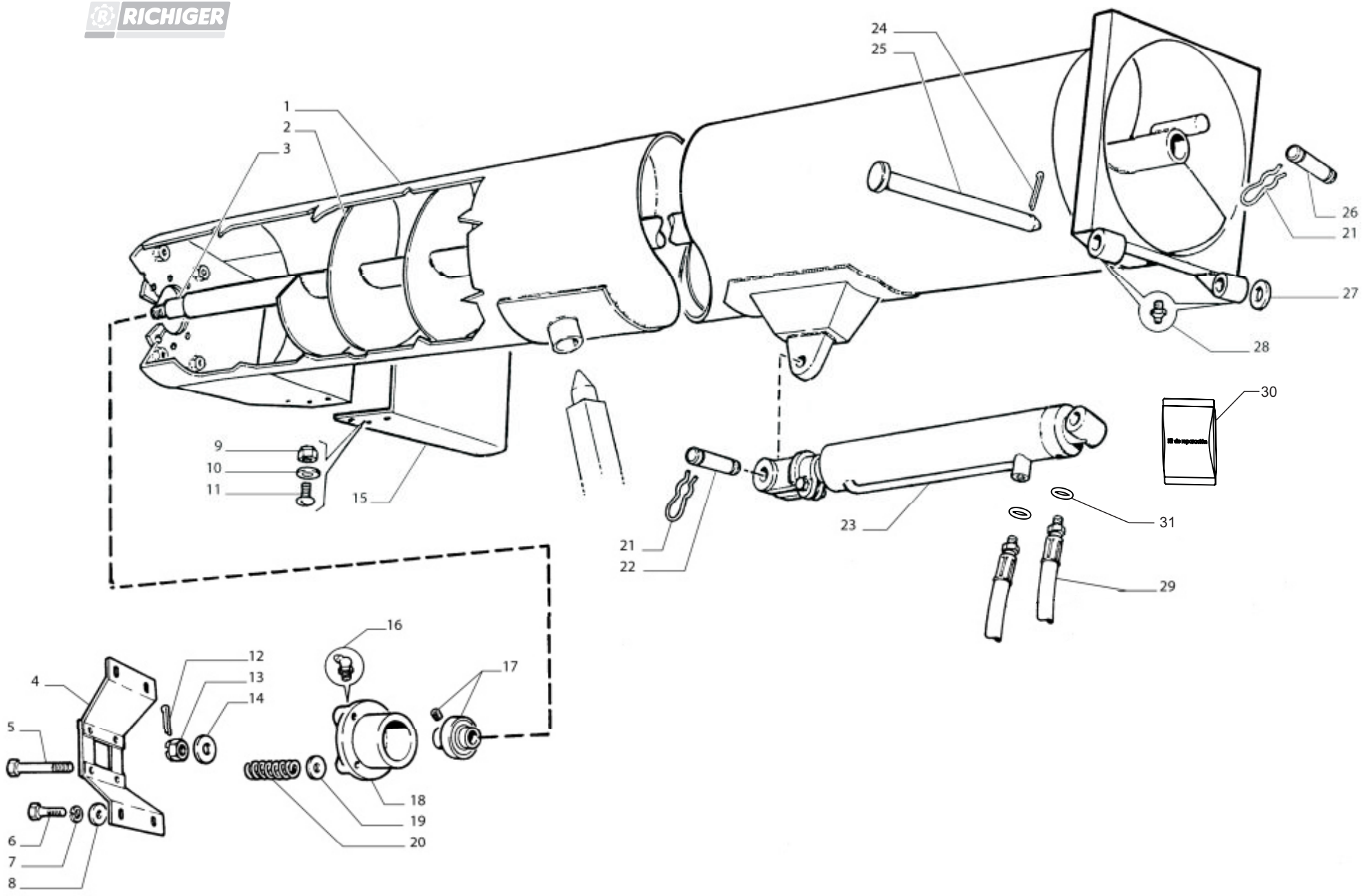

EA-910

Sheet Nº 8
Discharge auger, upper section

EA-910 - Sheet Nº 8 - Discharge auger, upper section			
Nº	**Description**	**Code**	**Qty.**
1	Outer tube, upper section	CDBW50060	1
2	Outer tube, upper section	CDBW50007	1
3	End stub, upper auger shaft	CDBW00013	1
4	Bracket, bearing housing	CDBW50002	1
5	Hex bolt gr. 5 BSW 1/2" x 6" w/40 mm thread	MCBU01068	4
6	Hex bolt gr. 5 BSW 3/8"x1"	MCBU00007	4
7	Disc springs 3/8" (20x10,2x0.8 mm)	MCAR01006	4
8	Flat washer galvanized 3/8"	MCAR00005	4
9	Self locking nut BSW 3/8"	MCTU06001	6
10	Flat washer galvanized 3/8"	MCAR00005	6
11	Trusshead screw BSW galvanized 3/8" x 3/4"	MCTO03001	6
12	Split pin 3x40 mm	MCCH01017	1
13	Castle nut NF 3/4"	MCTU10003	1
14	Flat washer 3/16" OD 36 / ID 20 (mm.)	CDAA42052	1
15	Extension	CDBW00213	1
16	Grease zerk, straight SAE 1/4"	MCAL00002	1
17	Bearing UC-207 2L	MCRO12008	1
18	Bearing housing UC 207	CDBW00036	1
19	Flat washer galvanized 1/2"	MCAR00007	4
20	Compression spring 3 x 26 x 120 (mm.)	MCRS01002	4
21	Hair Pin clip 4,5 x 90 mm	MCCH05002	2
22	Clevis pin 25 x 94,5 mm, hydraulic cylinder	MCHI07142	1
23	Hydraulic cylinder 1 1/4" rod diameter x 2 1/2" sleeve bore x 500 mm stroke	MCHI02023	1
24	Split pin 5x60 mm	MCCH01044	1
25	Hinge pin, auger tube	CDAZ50010	1
26	Clevis pin 25 x 108 mm, hydraulic cylinder	MCHI07143	1
27	Flat washer 3/16" OD 50 / ID 30 (mm.)	CDAA42010	1
28	Grease zerk, straight SAE 1/8"	MCAL00001	2
29	Hydraulic hose 1/4" SAE 100R2 AT x 3600 mm, connectors 7/8" female UNF 90° w/o-ring seat x 3/4" male UNF w/o-ring seat w/restricted Ø 1,5 mm flow	MCHI04017	2
30	Repair kit, hydraulic cylinder	MCHI00012	1
31	O-ring seal 23,47x29,37x2,95	MCRE01031	2

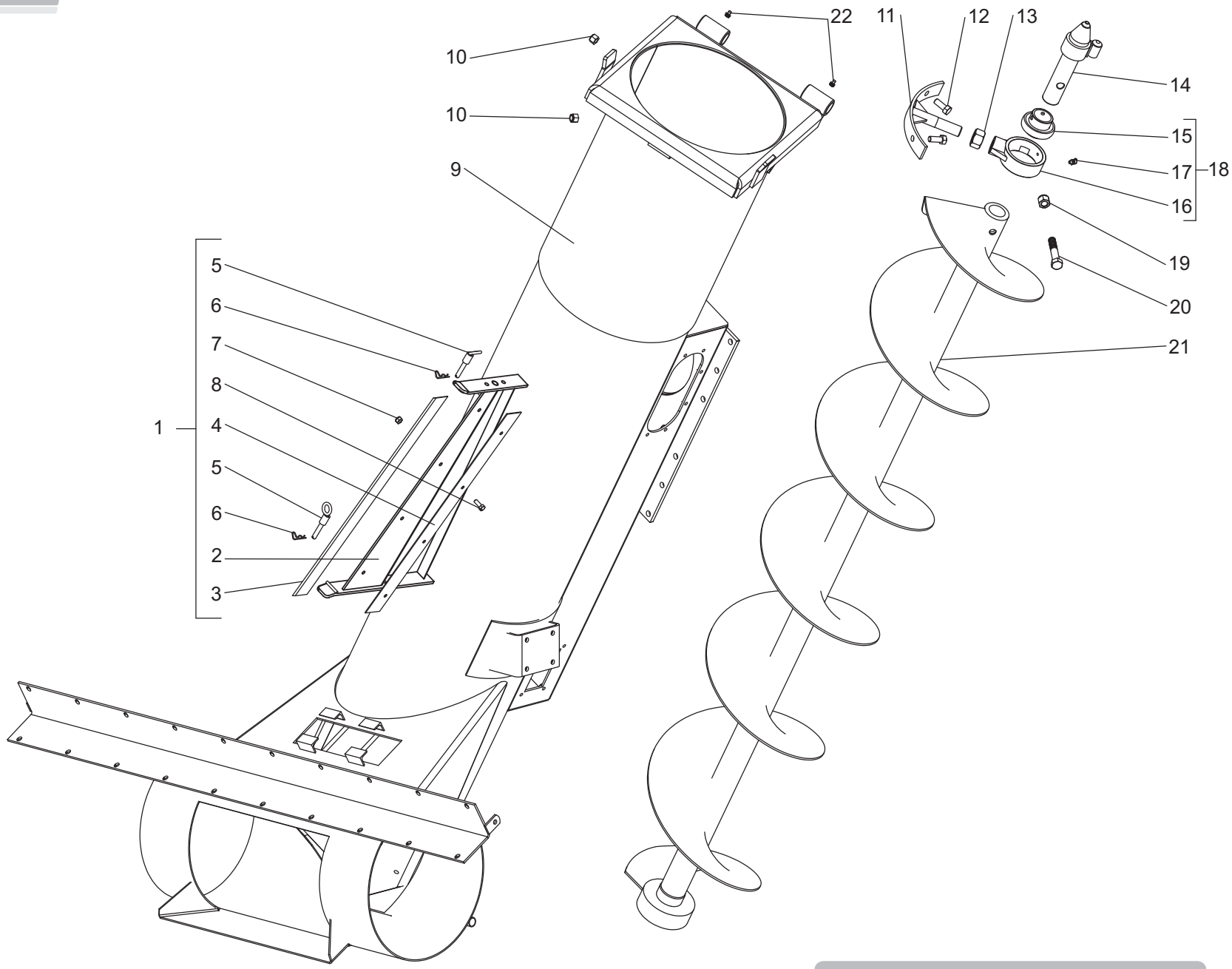

EA-910

Sheet Nº 9
Discharge auger, lower section

EA-910 - Sheet Nº 9 - Discharge auger, lower section			
Nº	**Description**	**Code**	**Qty.**
1	Complete cutter blade assy.	CDBX50006	1
2	Holding bracket, cutter blade	CDBX50005	1
3	Cutter blade	CDBX00044	1
4	Fastening bracket, cutter blade	CDBX00007	1
5	Lock pin, cutter blade	CDBW50020	2
6	R-clip 2x40 mm	MCCH00009	2
7	Self locking nut BSW 5/16"	MCTU06002	4
8	Hex bolt gr. 5 BSW 5/16"x7/8"	MCBU00022	4
9	Discharge tube, lower section	CDBZ50058	1
10	Self locking nut BSW 1/2"	MCTU06003	2
11	Support bracket, bearing housing	CDBW50016	1
12	Hex bolt gr. 5 BSW 1/2"x1 1/4"	MCBU00003	2
13	Hex nut gr. 5 BSW 1"	MCTU00010	1
14	Coupling, auger lower section	CDBW50019	1
15	Bearing UC-208 3L	MCRO12010	1
16	Bearing housing UC-208 3L	CDAA51036	1
17	Grease zerk, 45° angle SAE 1/4"	MCAL01001	1
18	Complete UC-208 bearing & bracket assy.	CDBW50031	1
19	Self locking nut BSW 5/8"	MCTU06005	1
20	Hex bolt gr. 5 BSW 5/8"x3 1/4"	MCBU00042	1
21	Discharge tube, lower section	CDBW50029	1
22	Grease zerk, straight SAE 1/8"	MCAL00001	2

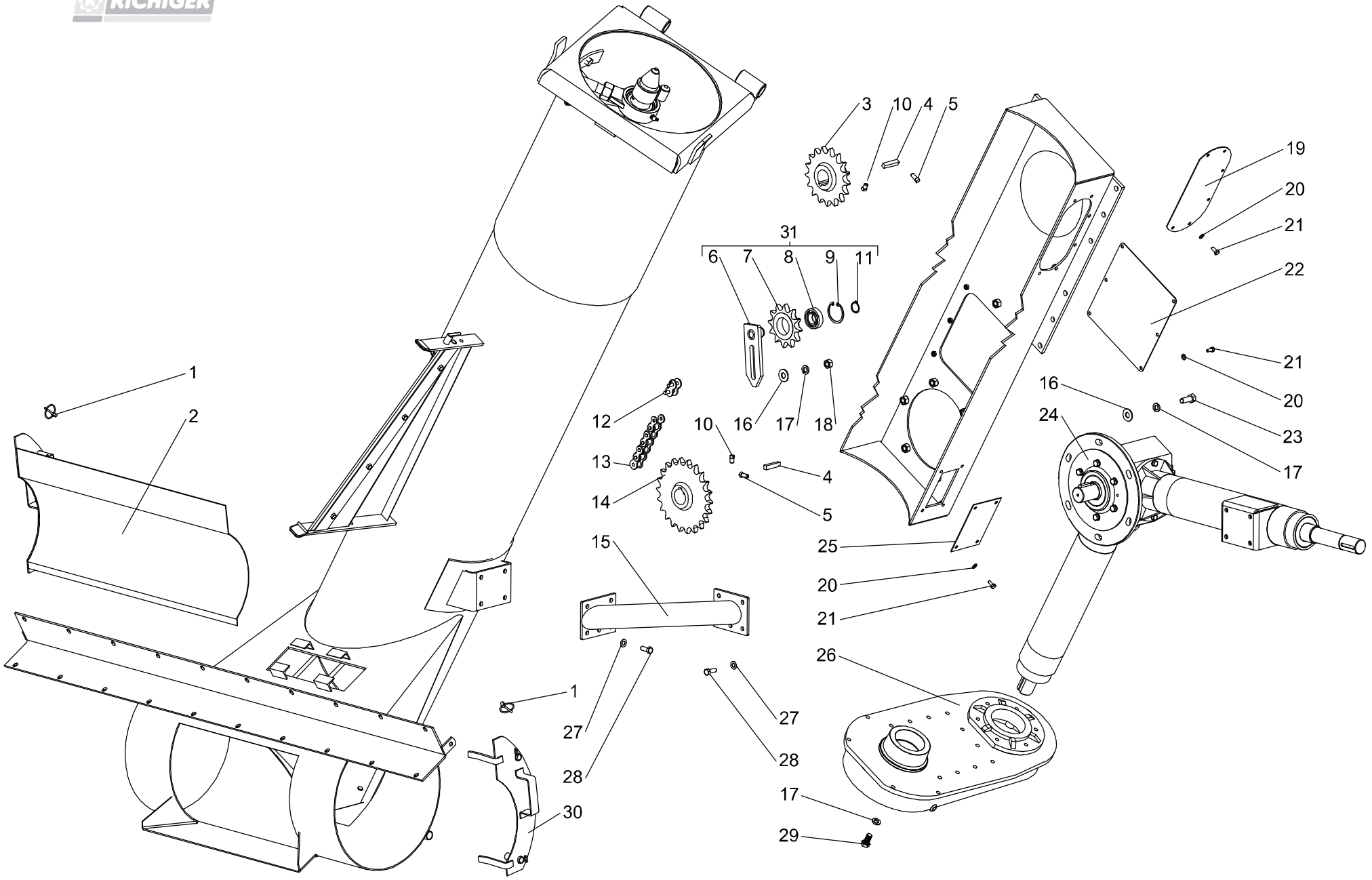

EA 910

Sheet Nº 10
Rear end driveline

EA-910 - Sheet Nº 10 - Rear end driveline			
Nº	**Description**	**Code**	**Qty.**
1	R-clip w/ring	MCCH03001	2
2	Left side cover, slide plate	CDBZ50010	1
3	Sprocket 17 tooth f/ASA 80/1 chain	CDBW00005	1
4	Square key 10x10x50 (mm.)	CDBW00048	2
5	Square head set screw 3/8"x3/4"	MCPR00014	2
6	Idler arm, rear	CDBW50017	1
7	Idler sprocket 12 tooth f/ASA 80/1 chain	CDBW00006	1
8	Bearing 6205 2RS	MCRO00017	1
9	Snap ring 52I DIN472	MCSE00004	1
10	Square head set screw 3/8"x1/2"	MCPR00012	1
11	Snap ring 25A DIN471	MCSE01006	1
12	Connecting link, ASA 80/1 roller chain	MCCA01017	1
13	Roller chain ASA 80/1	CDBZ50068	1
14	Sprocket 22 tooth f/ASA 80/1 chain	CDBW00007	1
15	Bracket, driveshaft casing	CDBZ50015	1
16	Flat washer galvanized 1/2"	MCAR00007	7
17	Disc springs 1/2" (24x13x2,8 mm)	MCAR03002	11
18	Hex nut gr. 5 BSW 1/2"	MCTU00005	1
19	Cover plate chain 1", side	CDBW00035	1
20	Disc springs 1/4" (14x7,2x0,8 mm)	MCAR01005	16
21	Hex bolt gr. 5 BSW 1/4"x5/8"	MCBU00004	16
22	Large cover plate, discharge tube	CDBZ00027	1
23	Hex bolt gr. 5 BSW 1/2"x1 1/4"	MCBU00003	6
24	Gearbox, single input/double output	CDBZ50070	1
25	Small cover plate, discharge tube	CDBR00027	1
26	Chain drive aasy., discharge auger	CDBW50035	1
27	Disc springs 3/8" (20x10,2x0.8 mm)	MCAR01006	8
28	Hex bolt gr. 5 BSW 3/8"x1"	MCBU00007	8
29	Hex bolt gr. 5 BSW 1/2"x1"	MCBU00024	4
30	Right side cover, slide plate	CDBZ50011	1
31	Idler arm, rear	CDBW50032	1

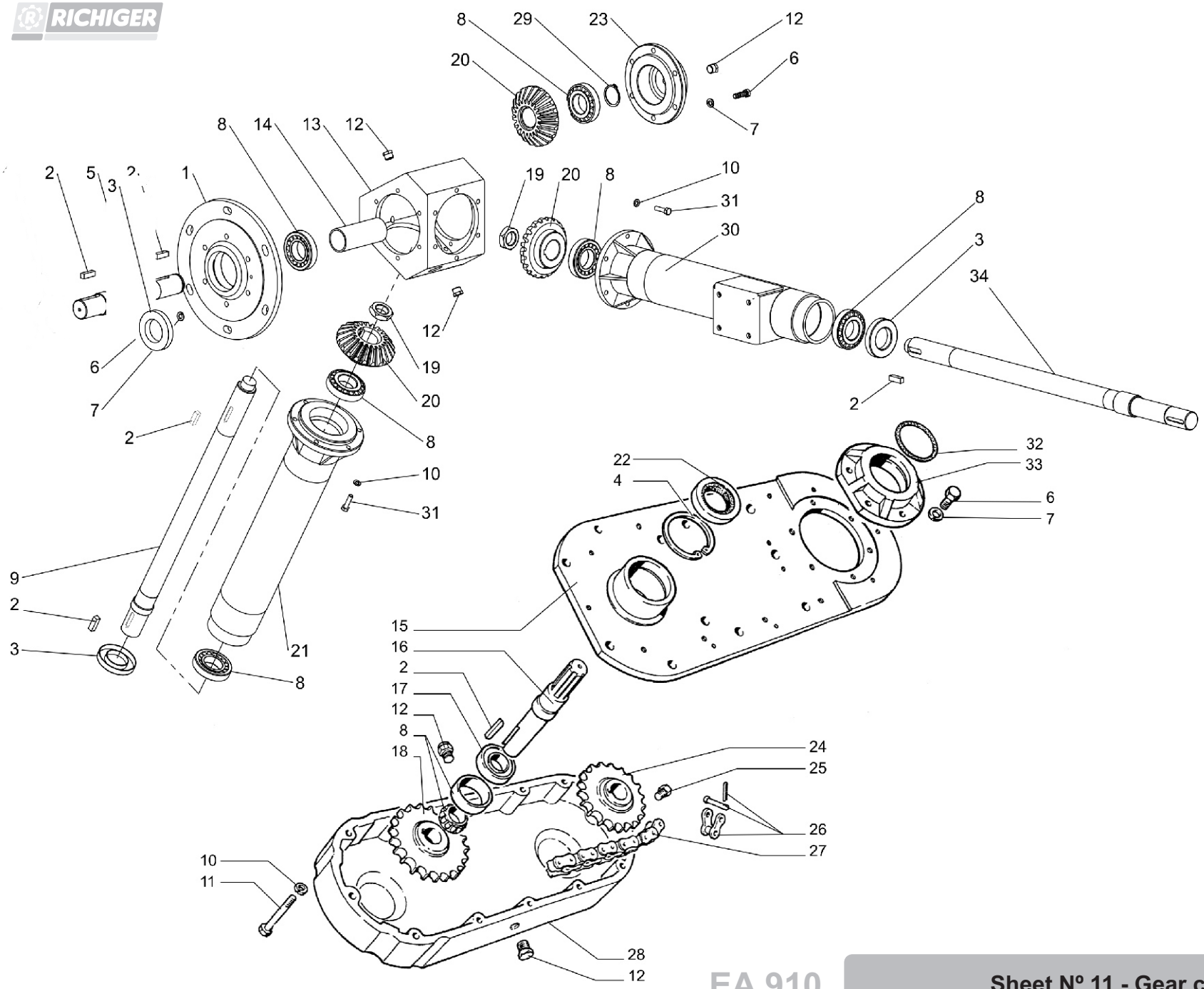

EA 910

Sheet Nº 11 - Gear case

EA-910 - Sheet Nº 11 - Gear case			
Nº	**Description**	**Code**	**Qty.**
1	Plate flange, input shaft	CDBW00037	1
2	Square key 5 x 10 (mm.)	CDAA45004	6
3	Oil seal 45x80x13 mm	MCRE00039	3
4	Snap ring 80I DIN472	MCSE00001	2
5	Input shaft	CDBW00038	1
6	Hex bolt BSW 3/8"x1 1/4"	MCBU01029	18
7	Disc springs 3/8" (20x10,2x0.8 mm)	MCAR01006	18
8	Bearing 30208	MCRO06006	7
9	Rear driveline	CDBZ00049	1
10	Disc springs 5/16" (16x8,2x0,6 mm)	MCAR01004	16
11	Hex bolt gr. 5 BSW 5/16"x3"	MCBU00020	4
12	Threaded plug 3/8" GAS	CDBG00014	4
13	Housing, gearbox	CDBW00039	1
14	Spacer bushing	CDBW00040	1
15	Cover plate, chain drive	CDBW50078	1
16	Splined shaft, chain drive	CDBW00095	1
17	Bearing 6208 2RS	MCRO00023	1
18	Driven sprocket 18 tooth f/ASA 80/1 chain	CDBW50079	1
19	Hex nut NF 1 1/8"	MCTU02011	2
20	Conical gear 21 tooth	CDBW00042	3
21	Housing, rear driveline	CDBZ50014	1
22	Oil seal 40x80x12 mm	MCRE00040	1
23	Bearing housing 30208	CDBW00041	1
24	Drive sprocket 18 tooth f/ASA 80/1 chain	CDBW00170	1
25	Threaded plug 1/4" GAS	CDBG00019	1
26	Offset link ASA 80/1 roller chain	MCCA01005	1
27	Roller chain ASA 80/1	CDBW00274	1
28	Casing, chain drive	CDBW00127	1
29	Snap ring 40A DIN471	MCSE01012	1
30	Housing, sweep auger drive shaft	CDBZ50019	1
31	Hex bolt BSW 5/16"x1 1/4"	MCBU01017	12
32	O-ring seal 91,67x98,73x3,53mm	MCRE01030	1
33	Base flange, cover plate	CDBW00128	1
34	Drive shaft, sweep augers	CDBZ00024	1

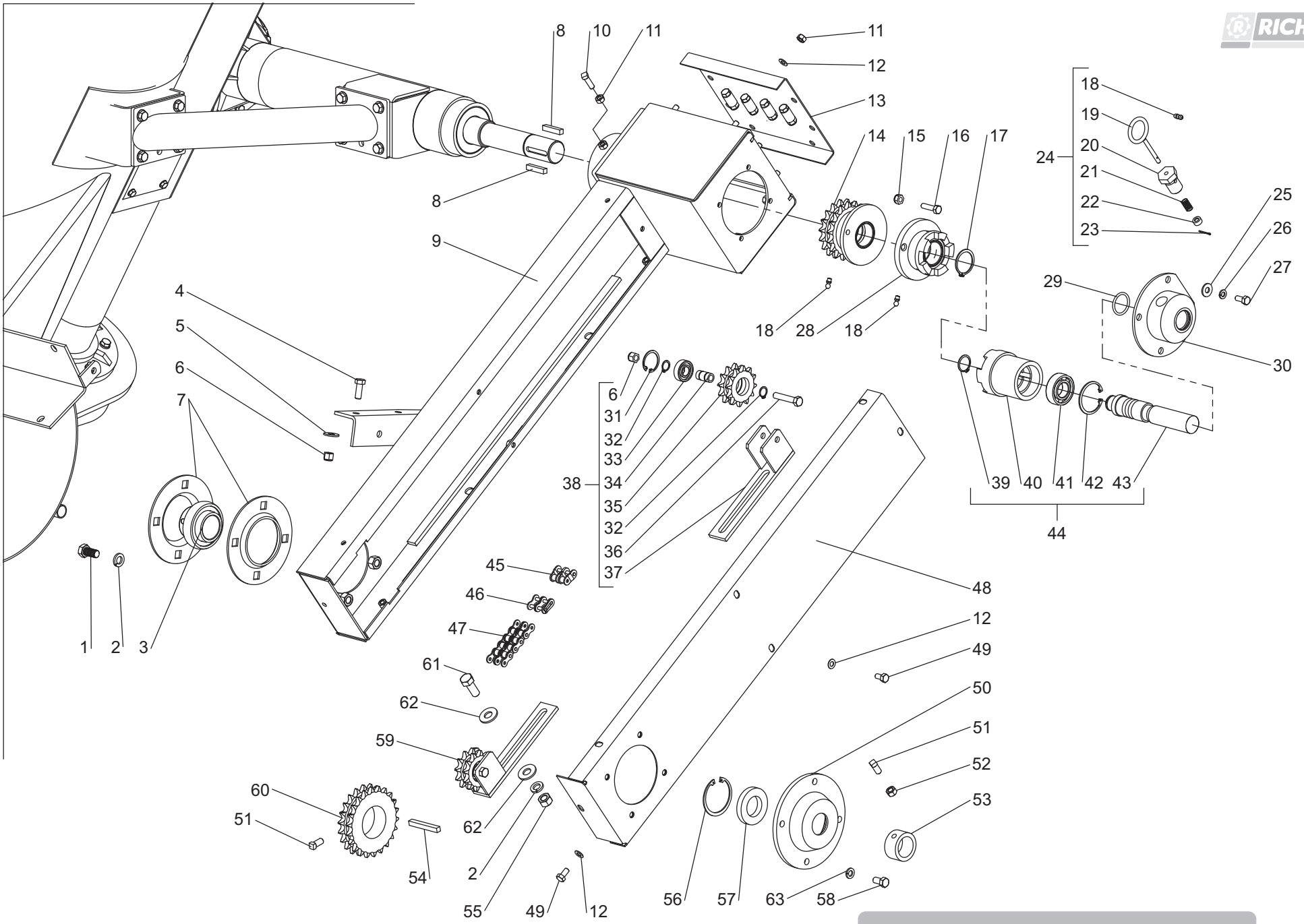

EA 910

Sheet Nº 12 - Sweep auger drive

EA-910 - Sheet Nº 12 - Sweep auger drive			
Nº	Description	Code	Qty.
1	Hex bolt gr. 5 BSW 1/2"x1"	MCBU00024	6
2	Disc springs 1/2" (24x13x2,8 mm)	MCAR03002	6
3	Bearing UC-208 3L	MCRO12010	1
4	Hex bolt gr. 5 BSW 3/8"x1"	MCBU00007	3
5	Flat washer galvanized 3/8"	MCAR00005	3
6	Self locking nut BSW 3/8"	MCTU06001	5
7	Bearing housing PF 208	CDAA51026	1
8	Square key 8x8x40 (mm.)	CDBZ00061	2
9	Housing, sweep auger drive	CDBZ50074	1
10	Square head set screw 5/16"x1"	MCPR00010	2
11	Hex nut gr. 5 BSW 5/16"	MCTU00002	10
12	Disc springs 5/16" (16x8,2x0,6 mm)	MCAR01004	16
13	Cover, gearcase	CDBZ50006	1
14	Double gear 18 teeth w/ bronze bushing	CDBZ50004	1
15	Self locking nut BSW 5/16"	MCTU06002	1
16	Hex bolt gr. 5 BSW 5/16"x1 1/4"	MCBU00002	1
17	Snap ring 38A DIN471	MCSE01011	1
18	Grease zerk, straight SAE 1/4"	MCAL00002	3
19	Lock pin, sweep augers	CDBZ50023	1
20	Bushing, lock pin	CDBZ00051	1
21	Spring, lock pin	MCRS01010	1

EA-910 - Sheet Nº 12 - Sweep auger drive			
Nº	Description	Code	Qty.
22	Bushing, small	CDBZ00071	1
23	Split pin 2x20 mm	MCCH01002	1
24	Complete lock pin assy.	CDBZ50028	1
25	Flat washer galvanized 5/16"	MCAR00004	4
26	Disc springs 5/16" (16x8,2x0,6 mm)	MCAR01004	4
27	Hex bolt gr. 5 BSW 5/16"x3/4"	MCBU00011	4
28	Gear coupling w/ bronze bushing, sweep augers	CDBZ50005	1
29	O-ring seal 31,34x38,40x3,53mm	MCRE01009	1
30	Lock, gear coupling	CDBZ50073	1
31	Snap ring 35I DIN472	MCSE00011	2
32	Snap ring 15A DIN471	MCSE01020	4
33	Bearing 6202 2RS	MCRO00011	2
34	Bushing, idler gear	CDBZ00013	2
35	Idler gear	CDBZ00012	2
36	Hex bolt gr. 5 BSW 3/8"x2"	MCBU00012	2
37	Idler arm	CDBZ50016	2
38	Idler arm, right side	CDBZ50017	1
39	Snap ring 25A DIN471	MCSE01006	1
40	Gear coupling, sweep augers	CDBZ00005	1
41	Bearing 6205 2RS	MCRO00017	1
42	Snap ring 52I DIN472	MCSE00004	1

EA-910 - Sheet Nº 12 - Sweep auger drive			
Nº	**Description**	**Code**	**Qty.**
43	Handle, gear coupling	CDBZ00054	1
44	Handle, gear coupling	CDBZ50025	1
45	Offset link ASA 50/2 roller chain	MCCA01013	1
46	Connecting link, ASA 50/2 roller chain	MCCA01026	1
47	Roller chain ASA 50/2	CDBZ50066	1
48	Chain cover	CDBZ50007	1
49	Hex bolt gr. 5 BSW 5/16"x5/8"	MCBU00045	8
50	Flange bracket, oil seal	CDBZ00042	1
51	Square head set screw 3/8"x3/4"	MCPR00014	2
52	Hex nut gr. 5 BSW 3/8"	MCTU00003	1
53	Outer ring, flange bracket	CDBZ00008	1
54	Square key 8x8x65 (mm.)	CDBZ00060	1
55	Hex nut gr. 5 BSW 1/2"	MCTU00005	2
56	Snap ring 62I DIN472	MCSE00003	1
57	Oil seal 35x62x10 mm	MCRE00031	1
58	Hex bolt gr. 5 BSW 3/8"x3/4"	MCBU00005	4
59	Idler arm, left side	CDBZ50018	1
60	Double gear 22 teeth, sweep augers	CDBZ50002	1
61	Hex bolt gr. 5 BSW 1/2"x1 1/4"	MCBU00003	2
62	Flat washer galvanized 1/2"	MCAR00007	4
63	Disc springs 3/8" (20x10,2x0.8 mm)	MCAR01006	4

WE MEET YOUR PRODUCTION NEEDS

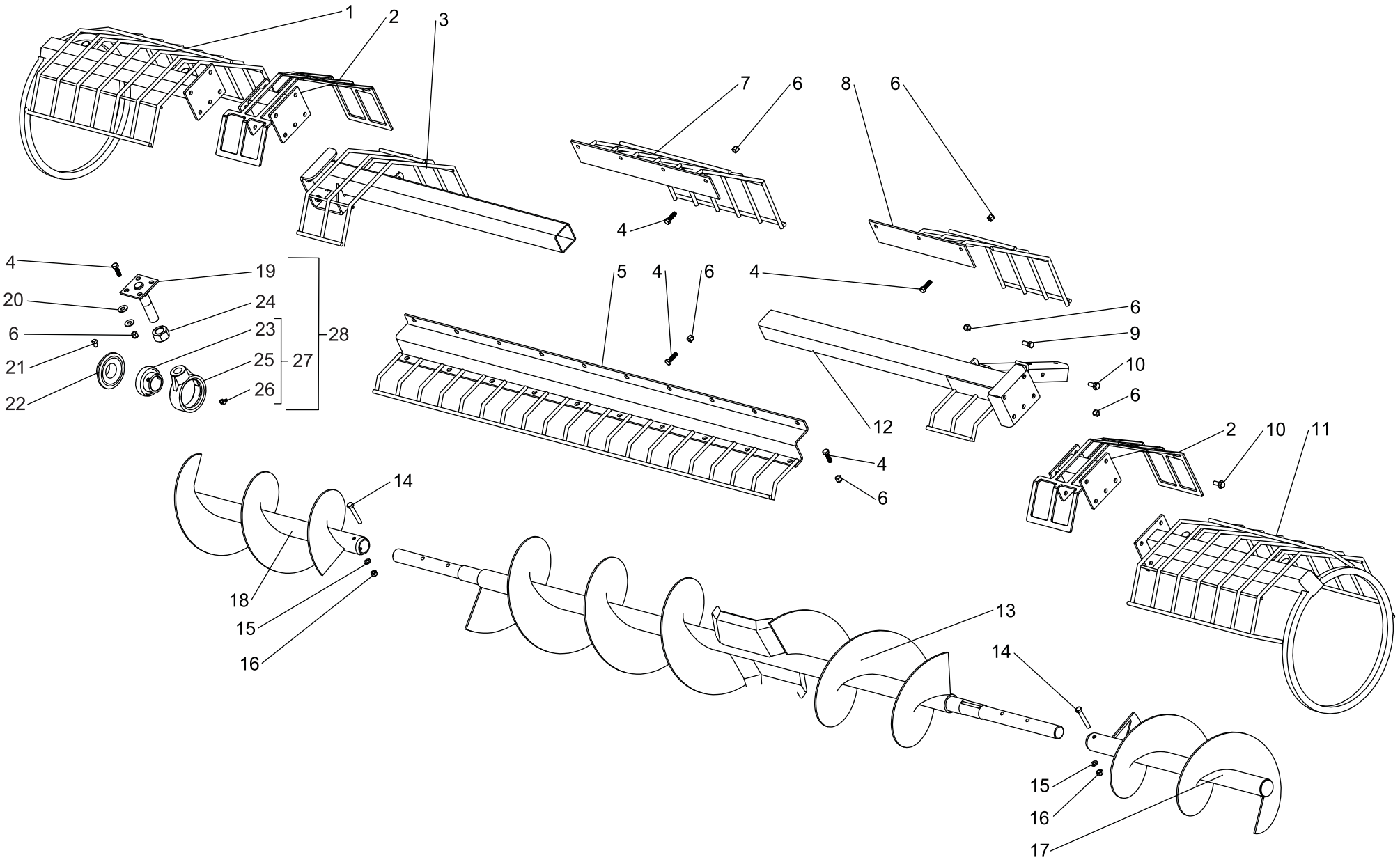

EA 910

Sheet Nº 13 - Sweep augers

EA-910 - Sheet Nº 13 - Sweep augers			
Nº	**Description**	**Code**	**Qty.**
1	Protection grid, left end section	CDBW50004	1
2	Protection grid, supplementary section	CDBX50004	2
3	Protection grid, left middle section	CDBZ50032	1
4	Hex bolt gr. 5 BSW 3/8" x 1 1/4"	MCBU00008	24
5	Protection grid, center section	CDBZ50038	1
6	Self locking nut BSW 3/8"	MCTU06001	34
7	Protection grid, left rear section	CDBZ50037	1
8	Protection grid, right rear section	CDBZ50036	1
9	Hex bolt gr. 5 BSW 3/8"x1"	MCBU00007	3
10	Flange bolt gr. 5 BSW 3/8" x 1"	MCBU13001	10
11	Protection grid, right end section	CDBW50003	1
12	Protection grid, right middle section	CDBZ50034	1
13	Sweep auger, center section	CDBZ50012	1
14	Hex bolt BSW 3/8" x 2 1/2"	MCBU01034	2
15	Disc springs 3/8" (20x10,2x0.8 mm)	MCAR01006	2
16	Hex nut gr. 5 BSW 3/8"	MCTU00003	2
17	Sweep auger, right end section	CDBX50002	1
18	Sweep auger, left end section	CDBX50003	1
19	Support bracket, bearing housing	CDBZ50013	1
20	Flat washer galvanized 3/8"	MCAR00005	8
21	Square head set screw 3/8"x1/2"	MCPR00012	1
22	Dust seal	CDBZ00028	1
23	Bearing UC-208 3L	MCRO12010	1
24	Hex nut gr. 5 BSW 1"	MCTU00010	1
25	Bearing housing UC-208 3L	CDAA51036	1
26	Grease zerk, 45° angle SAE 1/4"	MCAL01001	1
27	Complete UC-208 bearing & bracket assy.	CDBW50031	1
28	Support bracket, bearing housing	CDBZ50041	1

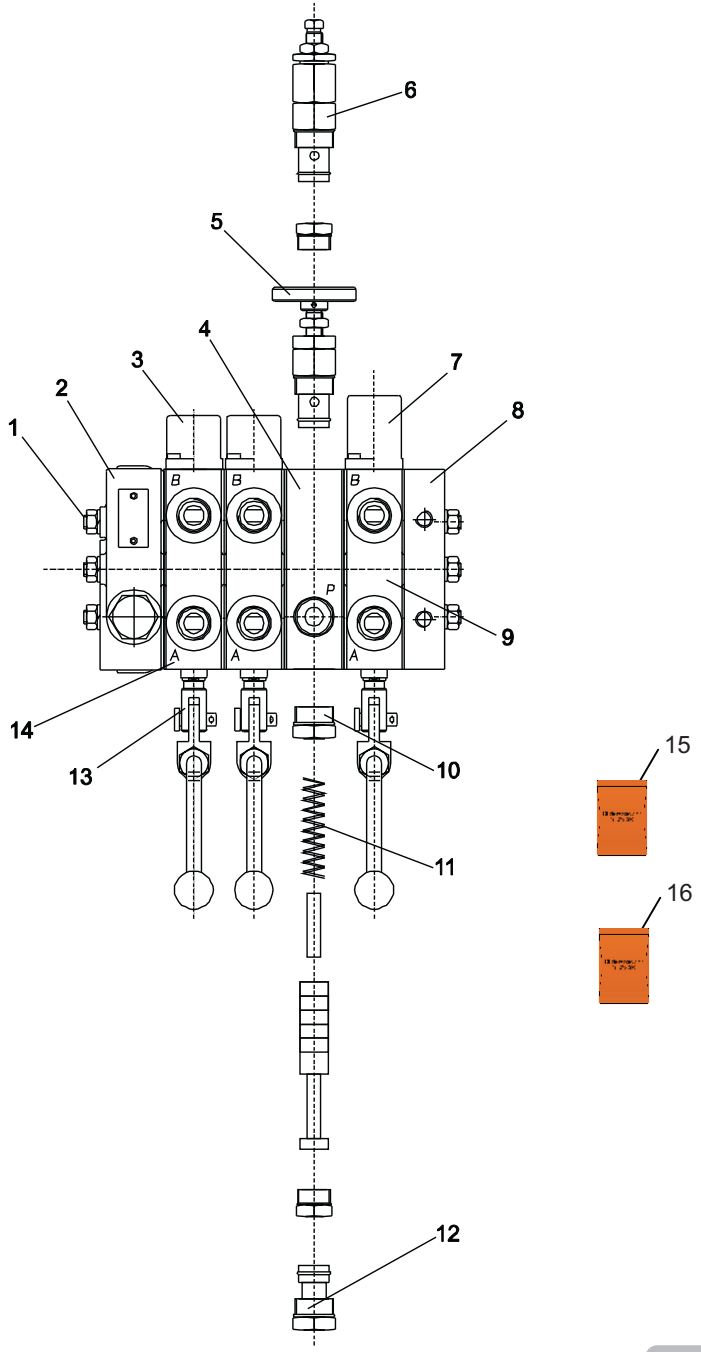
6
5
4
3
2
1
7
8
B
B
B
P
9
A
A
A
14
13
10
15
11
16
12

EA-910 - Sheet Nº 14 - Hydraulic controls			
Nº	**Description**	**Code**	**Qty.**
1	Tie-rod	MCHI07112	3
2	Outlet body	MCHI07113	1
3	Spring centered spool	MCHI07114	2
4	Inlet body w/flow divider	MCHI06015	1
5	Flow control valve	MCHI06016	1
6	Pressure relief valve	MCHI06017	1
7	Spring centered spool, 1 position detent	MCHI07101	1
8	Closure section	MCHI07115	1
9	Central body	MCHI06018	1
10	Plug, solid	MCHI07116	1
11	Spring, divider spool	MCHI07117	1
12	Replacement plug SVLP	MCHI07118	1
13	Lever actuator assy.	MCHI07119	3
14	Central body	MCHI06019	2
15	Cover repair kit	MCHI00032	1
16	Body repair kit	MCHI00033	4

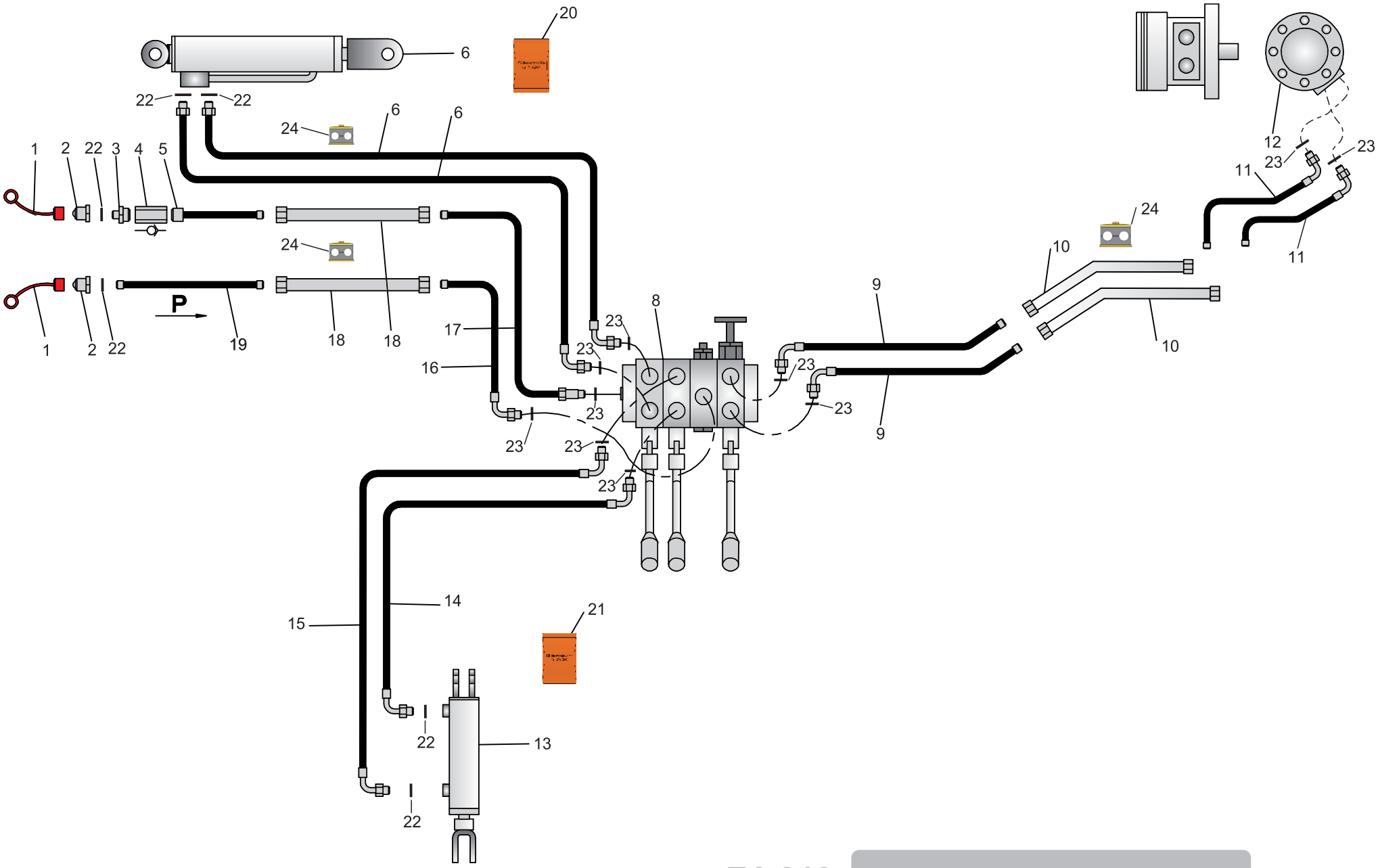
20
6
22
22
24
6
6
1
2
22
3
4
5
24
P
1
2
22
19
18
18
17
16
23
23
23
23
23
23
8
9
9
10
10
24
11
11
12
23
23
14
15
21
22
13
22

EA-910 - Sheet Nº 15 - Hydraulic circuit			
Nº	**Description**	**Code**	**Qty.**
1	Plastic plug BTHP 1/2"	MCHI07027	2
2	Quick disconnect coupling PNH 1/2" w/Boss 3/4" o-ring	MCHI07062	2
3	Adapter, 3/4" male NPT x 3/4" male UNF w/o-ring seat	MCHI07072	1
4	One-way valve, 3/4" female NPT both ends	MCHI06008	1
5	Hydraulic hose 1/2" SAE 100R2 AT x 2400 mm, connectors 7/8" male UNF JIC 37° x 3/4" male NPT	MCHI04025	1
6	Hydraulic hose 1/4" SAE 100R2 AT x 3600 mm, connectors 7/8" female UNF 90° w/o-ring seat x 3/4" male UNF w/o-ring seat w/restricted Ø 1,5 mm flow	MCHI04017	2
7	Hydraulic cylinder 1 1/4" rod diameter x 2 1/2" sleeve bore x 500 mm stroke	MCHI02023	1
8	Sauer Danfoss control valve, 60 liters/minute flow, 3 sections w/ mechanical lever actuators, single position detent w/ flow control and pressure relief auxiliary valves	MCHI06007	1
9	Hydraulic hose 1/2" SAE 100R2 AT x 1150 mm, connectors 7/8" male UNF JIC 37° x 7/8" male UNF 90° w/o-ring seat	MCHI04022	2
10	Hydraulic tube 5/8" x 1350 mm	MCHI05037	2
11	Hydraulic hose 1/2" SAE 100R2 AT x 500 mm, connectors 7/8" male UNF JIC 37° x 7/8" male UNF w/o-ring seat	MCHI04093	2
12	Sauer Danfoss orbital motor, 50 cc displacement	MCHI01002	1
13	Hydraulic cylinder, 1 1/4" rod diameter x 3" sleeve bore x 8" stroke	MCHI02024	1
14	Hydraulic hose 1/4" SAE 100R2 AT x 660 mm, connectors 7/8" male UNF w/o-ring seat x 3/4" male UNF w/o-ring seat	MCHI04019	1
15	Hydraulic hose 1/4" SAE 100R2 AT x 1000 mm, connectors 7/8" male UNF w/o-ring seat x 3/4" male UNF 90° w/o-ring seat	MCHI04018	1
16	Hydraulic hose 1/2" SAE 100R2 AT x 850 mm, connectors 7/8" male UNF JIC 37° x 7/8" male UNF 90º w/o-ring seat	MCHI04021	1
17	Hydraulic hose 1/2" SAE 100R2 AT x 700 mm, connectors 7/8" male UNF JIC 37° x 7/8" male UNF w/o-ring seat	MCHI04020	1
18	Hydraulic tubing 5/8" x 2720 mm., connectors 7/8" female swivel UNF JIC 37° both ends	MCHI05014	2
19	Hydraulic hose 1/2" SAE 100R2 AT x 2500 mm, connectors 7/8" male UNF JIC 37° x 3/4" male UNF o-ring	MCHI04024	1
20	Repair kit, hydraulic cylinder	MCHI00012	1
21	Repair kit, hydraulic cylinder	MCHI00017	1
22	O-ring seal 23,47x29,37x2,95	MCRE01031	6
23	O-ring seal 20,30x25,54x2,62	MCRE01032	10
24	Mounting bracket, double tubing 5/8"	MCHI07048	9

RICHIGER®

www.richiger.com

WE MEET YOUR PRODUCTION NEEDS